MI-1851: A Technical Guide to its Biological Targets and Associated Pathways

Author: BenchChem Technical Support Team. **Date**: April 2026

Compound of Interest

Compound Name:	*MI-1851*
Cat. No.:	*B12395342*

Get Quote

For Researchers, Scientists, and Drug Development Professionals

Introduction

MI-1851 is a peptidomimetic small molecule that has garnered significant interest as a potent and selective inhibitor of furin, a proprotein convertase vital for the maturation of a wide array of proteins. This technical guide provides an in-depth overview of the biological targets of **MI-1851**, the signaling pathways it modulates, and the experimental methodologies used for its characterization. The primary focus of research on **MI-1851** has been its application as an antiviral agent, particularly against SARS-CoV-2, where it has demonstrated significant efficacy in preclinical studies.[1]

Core Biological Target: Furin

The principal biological target of **MI-1851** is furin, a calcium-dependent serine endoprotease belonging to the proprotein convertase subtilisin/kexin (PCSK) family. Furin is ubiquitously expressed and predominantly localized in the trans-Golgi network (TGN), where it plays a crucial role in the proteolytic processing and activation of a diverse range of precursor proteins.

© 2026 BenchChem. All rights reserved.

Furin recognizes and cleaves proteins at specific polybasic amino acid sequences, typically Arg-X-Lys/Arg-Arg↓. This cleavage is essential for the maturation and subsequent biological activity of numerous substrates, including:

- Viral Glycoproteins: The spike proteins of many viruses, including SARS-CoV-2, influenza virus, and HIV, require furin-mediated cleavage for their activation, which is a critical step for viral entry into host cells.[2]
- Bacterial Toxins: Several bacterial toxins are synthesized as inactive precursors and require furin cleavage for their toxic activity.
- Growth Factors and Receptors: Precursors of growth factors such as Transforming Growth Factor-beta (TGF-β) and Nerve Growth Factor (NGF), as well as receptors like the insulin pro-receptor, are processed by furin.
- Hormones and Neuropeptides: Many hormones and neuropeptides are synthesized as larger pro-hormones and pro-peptides that require furin cleavage to become biologically active.
- Extracellular Matrix Proteins and Integrins: Components of the extracellular matrix and cell adhesion molecules are also substrates for furin, implicating it in tissue remodeling and cell migration.

By inhibiting furin, **MI-1851** effectively blocks the maturation of these and other substrate proteins, leading to a range of biological effects.

Quantitative Data Summary

The following tables summarize the available quantitative data on the biological activity of **MI-1851**.

Table 1: Antiviral Activity of **MI-1851** against SARS-CoV-2

© 2026 BenchChem. All rights reserved.

Cell Line	Assay Type	Endpoint	MI-1851 Concentration (μM)	Result	Reference
Calu-3	Viral Titer Reduction	Reduction in infectious virus	10	30- to 75-fold reduction	[3]
Calu-3	Viral Titer Reduction	Reduction in SARS-CoV-2 multiplication (in combination with 50 μM MI-432)	50	100- to 250-fold decrease	[3]

Table 2: Inhibition of Cytochrome P450 (CYP) Enzymes by **MI-1851**

© 2026 BenchChem. All rights reserved.

CYP Isoform	Test System	Substrate	MI-1851 Concentration (μM)	Inhibition	Reference
CYP1A2	Human Liver Microsomes	Fluorometric	Not specified	No significant inhibition	[4][5]
CYP2C9	Human Liver Microsomes	Fluorometric	Not specified	No significant inhibition	[4][5]
CYP2C19	Human Liver Microsomes	Fluorometric	Not specified	No significant inhibition	[4][5]
CYP2D6	Human Liver Microsomes	Fluorometric	Not specified	No significant inhibition	[4][5]
CYP3A4	Human Liver Microsomes	Fluorometric	20	Weak inhibition	[4]
CYP3A4	Recombinant Human CYP3A4	Testosterone	20	Weak inhibition	[4]
CYP3A4	Primary Human Hepatocytes	Chemiluminescent	20-100	Significant, concentration-dependent inhibition	[4]

Table 3: Cytotoxicity Profile of **MI-1851**

© 2026 BenchChem. All rights reserved.

Cell Line	Assay Type	Incubation Time	MI-1851 Concentration (μM)	Result	Reference
Primary Human Hepatocytes	MTS Assay	24 hours	Up to 100	No significant effect on cell viability	[4]
Calu-3	Not specified	Not specified	50	Considered safe for use in cell culture	[4]

Signaling Pathways Modulated by MI-1851

The primary mechanism of action of **MI-1851** is the direct inhibition of furin. This leads to the modulation of signaling pathways that are dependent on furin-mediated protein processing.

Viral Entry Pathway

In the context of viral infections, **MI-1851** directly interferes with the viral entry pathway. For enveloped viruses like SARS-CoV-2, the spike (S) protein on the viral surface must be cleaved at the S1/S2 and S2' sites to facilitate membrane fusion and entry into the host cell. Furin is the primary host protease responsible for the cleavage at the S1/S2 site. By inhibiting furin, **MI-1851** prevents this crucial cleavage event, thereby blocking viral entry and subsequent replication.

© 2026 BenchChem. All rights reserved.

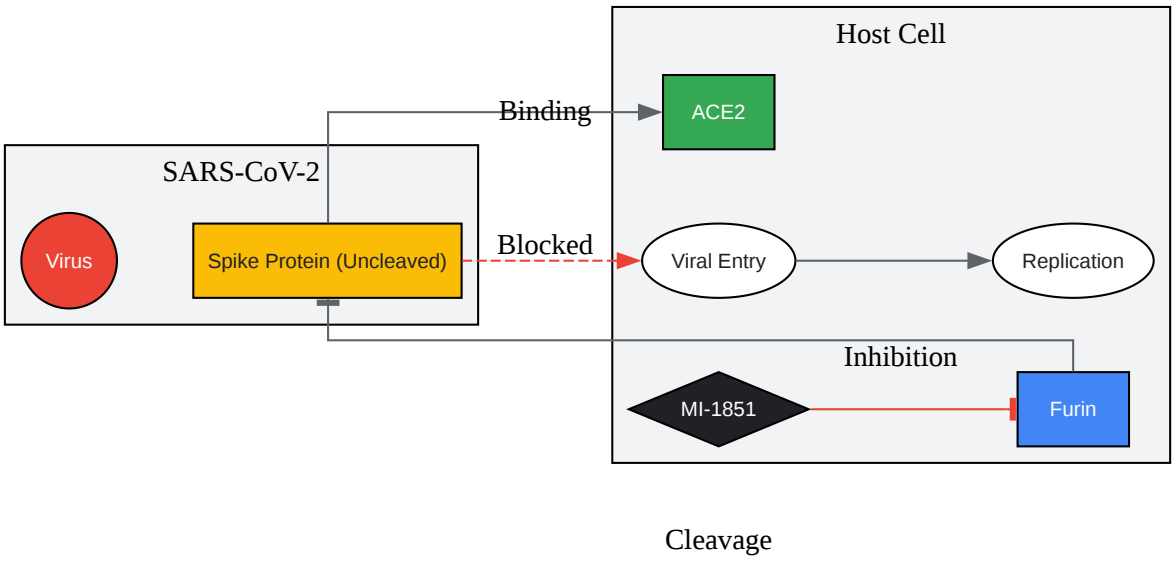

Click to download full resolution via product page

Caption: Inhibition of SARS-CoV-2 entry by **MI-1851**.

Potential Modulation of Host Signaling Pathways

Given the vast number of endogenous substrates for furin, **MI-1851** has the potential to modulate a variety of host cell signaling pathways. While direct experimental evidence for **MI-1851**'s effects on these pathways is still emerging, its known mechanism of action allows for informed hypotheses.

- TGF-β Signaling: Furin is responsible for the proteolytic activation of the TGF-β precursor protein. The TGF-β signaling pathway is crucial in regulating cell growth, differentiation, and immune responses. By inhibiting furin, **MI-1851** could potentially downregulate TGF-β signaling, which may have implications in diseases characterized by excessive TGF-β activity, such as fibrosis and certain cancers.

- Notch Signaling: The Notch receptor undergoes a critical furin-dependent cleavage step in the trans-Golgi network during its maturation. The Notch signaling pathway is fundamental for cell-fate decisions during development and in adult tissues. Inhibition of furin by **MI-1851**

© 2026 BenchChem. All rights reserved.

could therefore interfere with Notch receptor maturation and subsequent signaling, impacting processes like neurogenesis, angiogenesis, and immune cell development.

- Growth Factor Signaling: Several growth factor receptors, including the insulin-like growth factor receptor (IGF-1R) and fibroblast growth factor receptor (FGFR), are processed by furin. By inhibiting this processing, **MI-1851** could potentially attenuate the signaling cascades downstream of these receptors, which are often implicated in cell proliferation and survival.

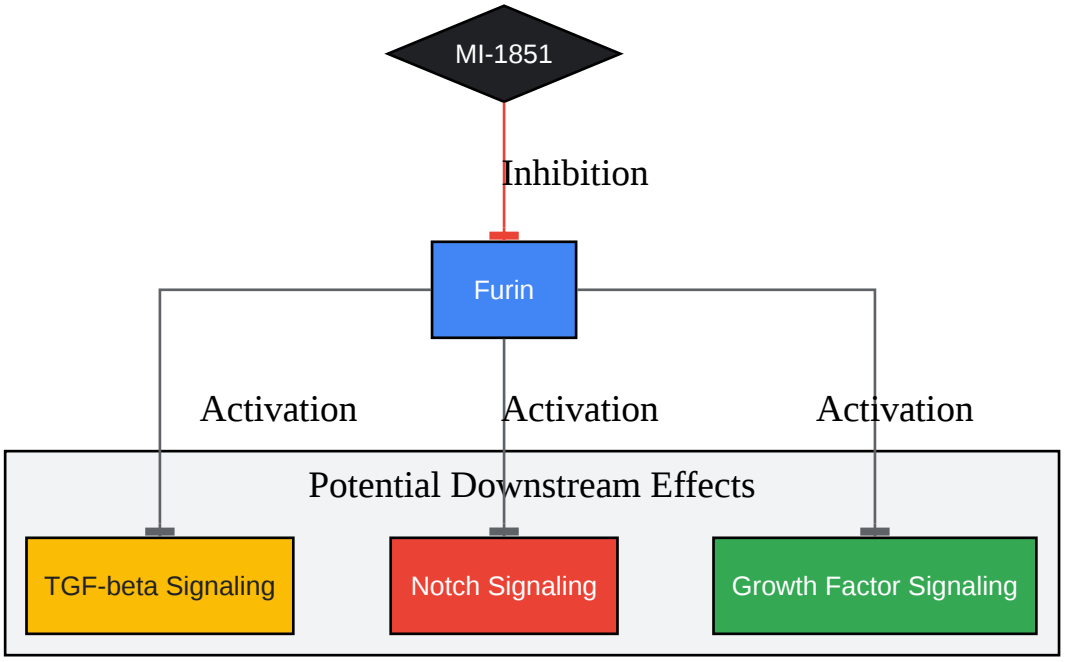

Click to download full resolution via product page

Caption: Potential modulation of host signaling pathways by **MI-1851**.

Experimental Protocols

Detailed methodologies for key experiments cited in the characterization of **MI-1851** are provided below.

Furin Inhibition Assay (General Protocol)

This protocol describes a general method for assessing the inhibitory activity of compounds like **MI-1851** against furin.

© 2026 BenchChem. All rights reserved.

Materials:

- Recombinant human furin
- Fluorogenic furin substrate (e.g., Boc-RVRR-AMC)
- Assay buffer (e.g., 100 mM HEPES, pH 7.5, 1 mM $CaCl_2$, 0.5% Triton X-100)
- **MI-1851**
- 96-well black microplates
- Fluorometer

Procedure:

- Prepare serial dilutions of **MI-1851** in assay buffer.
- In a 96-well plate, add recombinant furin to each well.
- Add the diluted **MI-1851** or vehicle control to the wells and pre-incubate for a specified time (e.g., 15-30 minutes) at 37°C.
- Initiate the reaction by adding the fluorogenic furin substrate to each well.
- Immediately measure the fluorescence intensity at appropriate excitation and emission wavelengths (e.g., 380 nm excitation, 460 nm emission for AMC) over time.
- Calculate the rate of substrate cleavage for each concentration of **MI-1851**.
- Determine the IC_{50} value by plotting the percentage of inhibition against the logarithm of the **MI-1851** concentration.

SARS-CoV-2 Viral Titer Reduction Assay (Plaque Assay)

This protocol is used to quantify the effect of **MI-1851** on the production of infectious SARS-CoV-2 particles.

Materials:

© 2026 BenchChem. All rights reserved.

- Calu-3 cells
- SARS-CoV-2 isolate
- Complete cell culture medium
- **MI-1851**
- Agarose or methylcellulose overlay
- Crystal violet staining solution
- 6-well plates

Procedure:

- Seed Calu-3 cells in 6-well plates and grow to confluence.
- Pre-treat the cells with various concentrations of **MI-1851** or vehicle control for a specified time (e.g., 1-2 hours).
- Infect the cells with a known titer of SARS-CoV-2 for 1 hour at 37°C.
- Remove the virus inoculum and wash the cells with PBS.
- Add an overlay medium containing the respective concentrations of **MI-1851** to each well.
- Incubate the plates for 48-72 hours at 37°C.
- Fix the cells with 4% paraformaldehyde.
- Remove the overlay and stain the cells with crystal violet.
- Wash the plates with water and allow them to dry.
- Count the number of plaques in each well and calculate the percentage of viral titer reduction compared to the vehicle control.

© 2026 BenchChem. All rights reserved.

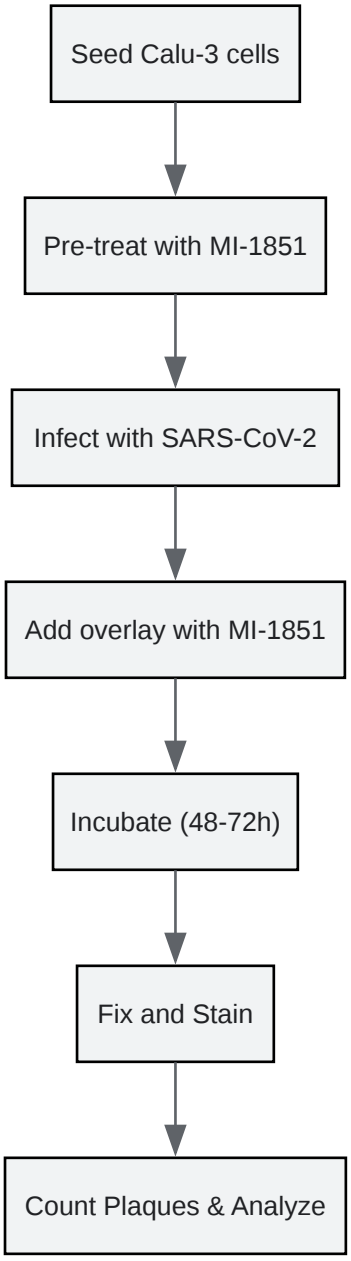

Click to download full resolution via product page

Caption: Workflow for SARS-CoV-2 plaque reduction assay.

CYP Inhibition Assay (Fluorometric Method)

This protocol outlines the procedure for assessing the inhibitory effect of **MI-1851** on various CYP450 isoforms.

Materials:

© 2026 BenchChem. All rights reserved.

- Human liver microsomes
- Specific fluorogenic substrates for each CYP isoform
- NADPH regenerating system
- **MI-1851**
- 96-well black microplates
- Fluorometer

Procedure:

- Prepare serial dilutions of **MI-1851**.
- In a 96-well plate, add human liver microsomes, the specific CYP substrate, and the **MI-1851** dilutions or vehicle control.
- Pre-incubate the mixture at 37°C.
- Initiate the reaction by adding the NADPH regenerating system.
- Incubate for a specific time at 37°C.
- Stop the reaction (e.g., by adding acetonitrile).
- Measure the fluorescence of the metabolite formed.
- Calculate the percentage of inhibition for each **MI-1851** concentration and determine the IC_{50} value.

Cytotoxicity Assay (MTS Assay)

This protocol is used to evaluate the potential cytotoxic effects of **MI-1851** on cells.

Materials:

- Primary Human Hepatocytes or other cell lines of interest

© 2026 BenchChem. All rights reserved.

- Complete cell culture medium
- **MI-1851**
- MTS reagent
- 96-well plates
- Spectrophotometer

Procedure:

- Seed cells in a 96-well plate and allow them to adhere.
- Treat the cells with various concentrations of **MI-1851** or vehicle control.
- Incubate for 24 hours at 37°C.
- Add MTS reagent to each well and incubate for 1-4 hours at 37°C.
- Measure the absorbance at 490 nm.
- Calculate the percentage of cell viability relative to the vehicle-treated control cells.

Conclusion

MI-1851 is a potent furin inhibitor with demonstrated antiviral activity against SARS-CoV-2. Its primary mechanism of action is the blockade of furin-mediated cleavage of the viral spike protein, which is essential for viral entry. The available data indicate a favorable in vitro safety profile with minimal off-target effects on major CYP450 enzymes, although some inhibition of CYP3A4 is observed at higher concentrations. The broad substrate repertoire of furin suggests that **MI-1851** may have wider therapeutic applications by modulating key signaling pathways such as TGF-β, Notch, and growth factor signaling. Further research is warranted to fully elucidate the impact of **MI-1851** on these host cell pathways and to explore its therapeutic potential in a broader range of diseases.

© 2026 BenchChem. All rights reserved.

Need Custom Synthesis?

BenchChem offers custom synthesis for rare earth carbides and specific isotopiclabeling.

Email: info@benchchem.com or Request Quote Online.

References

- 1. FURIN AT THE CUTTING EDGE: FROM PROTEIN TRAFFIC TO EMBRYOGENESIS AND DISEASE - PMC [pmc.ncbi.nlm.nih.gov]
- 2. Furin - Wikipedia [en.wikipedia.org]
- 3. Substrate Cleavage Analysis of Furin and Related Proprotein Convertases: A COMPARATIVE STUDY - PMC [pmc.ncbi.nlm.nih.gov]
- 4. In vitro characterization of the furin inhibitor MI-1851: Albumin binding, interaction with cytochrome P450 enzymes and cytotoxicity - PMC [pmc.ncbi.nlm.nih.gov]
- 5. In vitro characterization of the furin inhibitor MI-1851: Albumin binding, interaction with cytochrome P450 enzymes and cytotoxicity - PubMed [pubmed.ncbi.nlm.nih.gov]
- To cite this document: BenchChem. [MI-1851: A Technical Guide to its Biological Targets and Associated Pathways]. BenchChem, [2026]. [Online PDF]. Available at: [https://www.benchchem.com/product/b12395342/docs#mi-1851-a-technical-guide-to-its-biological-targets-and-associated-pathways]

Disclaimer & Data Validity:

The information provided in this document is for Research Use Only (RUO) and is strictly not intended for diagnostic or therapeutic procedures. While BenchChem strives to provide accurate protocols, we make no warranties, express or implied, regarding the fitness of this product for every specific experimental setup.

Technical Support: The protocols provided are for reference purposes. Unsure if this reagent suits your experiment?

Need Industrial/Bulk Grade? Request Custom Synthesis Quote

BenchChem

Our mission is to be the trusted global source of essential and advanced chemicals, empowering scientists and researchers to drive progress in science and industry.

Contact

Address: 3281 E Guasti Rd

Ontario, CA 91761, United States

Phone: (601) 213-4426

Email: info@benchchem.com

Contact our Ph.D. Support Team for a compatibility check

© 2026 BenchChem. All rights reserved.