TH6342: A Technical Guide to a Novel Chemical Probe for SAMHD1 Function

Author: BenchChem Technical Support Team. **Date**: April 2026

Compound of Interest

Compound Name:	*TH6342*
Cat. No.:	*B12386964*

Get Quote

For Researchers, Scientists, and Drug Development Professionals

Abstract

Sterile alpha motif and histidine-aspartic acid domain-containing protein-1 (SAMHD1) is a critical enzyme that regulates the intracellular pool of deoxynucleoside triphosphates (dNTPs). Its function as a dNTP triphosphohydrolase makes it a key player in cellular homeostasis, retroviral restriction (including HIV-1), and the metabolism of nucleoside analog chemotherapies. The development of specific chemical probes is essential for dissecting its complex biology and validating it as a therapeutic target. This guide provides an in-depth overview of **TH6342**, a first-in-class small-molecule inhibitor of SAMHD1, detailing its mechanism of action, biochemical and cellular activity, and the experimental protocols used for its characterization. **TH6342** represents a valuable tool for studying SAMHD1 enzymology through a unique inhibitory mechanism.

Introduction to SAMHD1

SAMHD1 is a dNTP triphosphohydrolase that catalyzes the hydrolysis of dNTPs into their corresponding deoxynucleosides and an inorganic triphosphate.[1][2] This activity is crucial for maintaining low dNTP levels in non-cycling cells like macrophages and resting T-cells, thereby

© 2026 BenchChem. All rights reserved.

restricting the replication of retroviruses such as HIV-1 which require dNTPs for reverse transcription.[3][4][5][6] Furthermore, SAMHD1 can inactivate the triphosphorylated metabolites of several nucleoside analog drugs used in cancer therapy, such as cytarabine (ara-C), contributing to drug resistance.[1][2][7]

The catalytic activity of SAMHD1 is tightly regulated through an allosteric mechanism. The enzyme exists as a monomer in its inactive state. Binding of GTP or dGTP to a primary allosteric site (A1) induces dimerization.[8][9] This dimer can then bind another dNTP at a second allosteric site (A2), which promotes the formation of a catalytically competent homotetramer.[4][5][10] This complex activation process presents unique opportunities for targeted inhibition.

TH6342: A Novel SAMHD1 Inhibitor

TH6342 (also known as CBK037371) was identified through a high-throughput screening of over 17,000 compounds using an enzyme-coupled malachite green assay.[1][11] It is a specific, low-micromolar small-molecule inhibitor of SAMHD1.[1][12] Subsequent structure-activity relationship (SAR) studies led to the development of more potent analogs like TH7127 and TH7528, as well as an inactive analog, TH7126, which serves as a valuable negative control for experiments.[1][13]

Mechanism of Action

TH6342 exhibits a novel mode of inhibition that distinguishes it from previously identified nucleotide analog inhibitors. Instead of competing for the nucleotide-binding pockets (either the catalytic site or the allosteric sites), **TH6342** engages with a pre-tetrameric form of SAMHD1.[1][3][14] This interaction deters the efficient dimerization and subsequent oligomerization required for allosteric activation and catalysis.[1][2][12]

Key features of its mechanism include:

- Allosteric Inhibition: It delays the allosteric activation of SAMHD1, as evidenced by an increase in the Hill coefficient in enzyme kinetic studies.[1][8]
- Deterrence of Oligomerization: Biophysical assays confirm that **TH6342** hinders the GTP-induced dimerization that is a prerequisite for forming the active tetramer.[1]

© 2026 BenchChem. All rights reserved.

- Non-competitive with Nucleotides: The inhibitory mechanism does not involve occupying the known (d)NTP binding pockets.[3][14][15]
- SAM Domain Independence: The N-terminal SAM domain of the protein is not required for inhibition by **TH6342**, suggesting the binding site is located within the HD catalytic domain.[2][16][17]

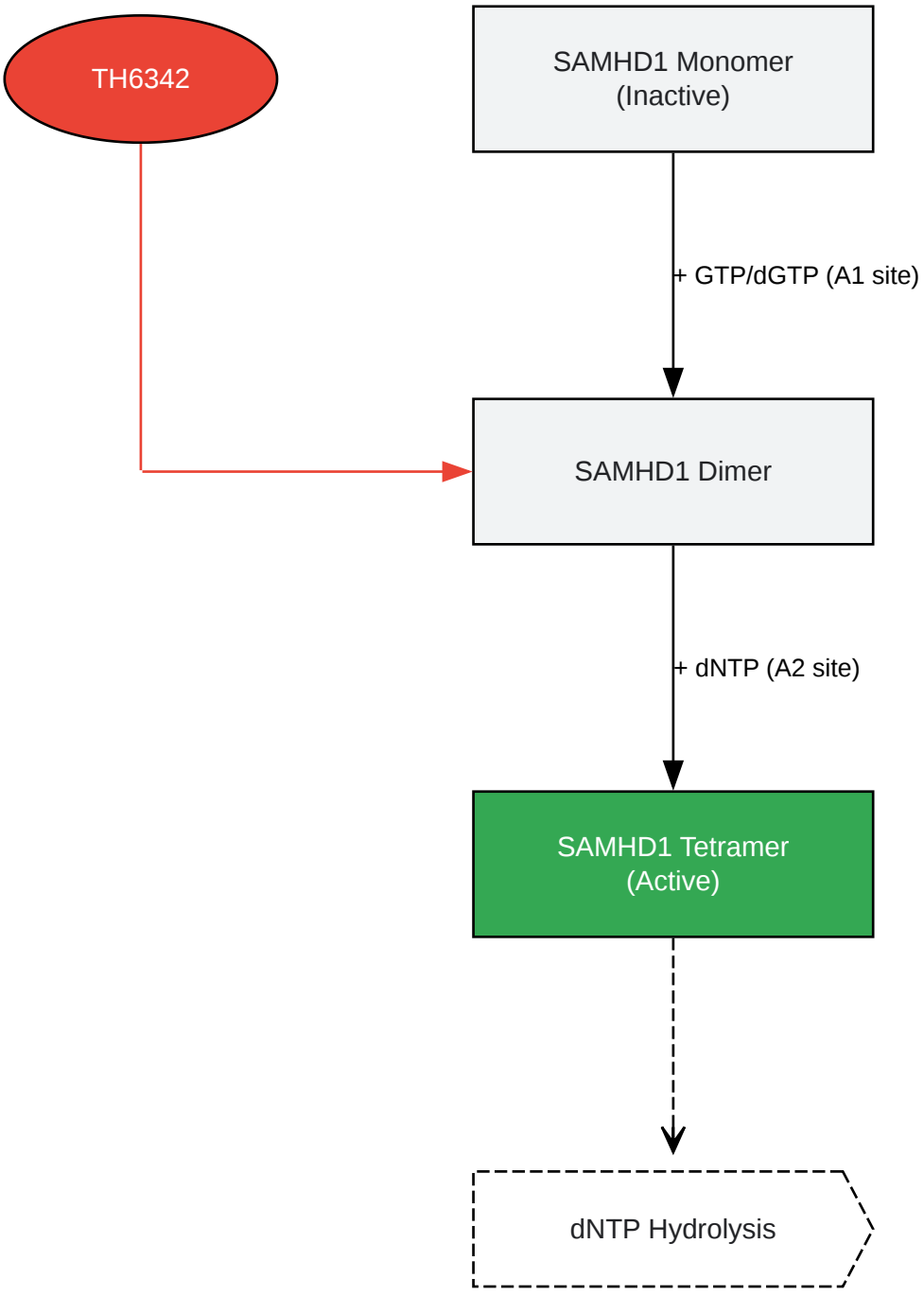

© 2026 BenchChem. All rights reserved.

Click to download full resolution via product page

Caption: Mechanism of SAMHD1 activation and **TH6342** inhibition.

Quantitative Data

The inhibitory potency and biophysical interactions of **TH6342** and its analogs have been quantified through various assays.

Table 1: Biochemical Potency of **TH6342** and Analogs against SAMHD1

Compound	Substrate	IC_{50} (μM)	Reference
TH6342	**dGTP**	**9.6**	**[1][12]**
	ara-CTP	5.8	[12]
	Cl-F-ara-ATP	11.0	[12]
TH7127	dGTP	~4	[1]
TH7528	dGTP	~6	[1]

| TH7126 (Inactive Control) | dGTP | > 100 |[1] |

Table 2: Biophysical Interaction of **TH6342** with SAMHD1

© 2026 BenchChem. All rights reserved.

Assay	Condition	Observation	Interpretation	Reference
DSF	**Recombinant SAMHD1**	**Reduced the first apparent melting temp (Tm_1)**	**Direct engagement with pre-tetrameric SAMHD1**	**[1]**
DSF	Recombinant SAMHD1 + GTP	Decreased the melting temperature (Tm)	Destabilizes the GTP-bound state, consistent with deterring oligomerization	[1]
CETSA	THP-1 Cell Lysate	Mildly enhanced thermal stability (increased Tagg)	Target engagement in a cellular context	[1][18]

| CETSA | Intact THP-1 Cells | No significant change in thermal stability | Low cell permeability | [1][18] |

Experimental Protocols

A rigorous pipeline of biochemical, biophysical, and cell-based assays was used to characterize **TH6342**.

© 2026 BenchChem. All rights reserved.

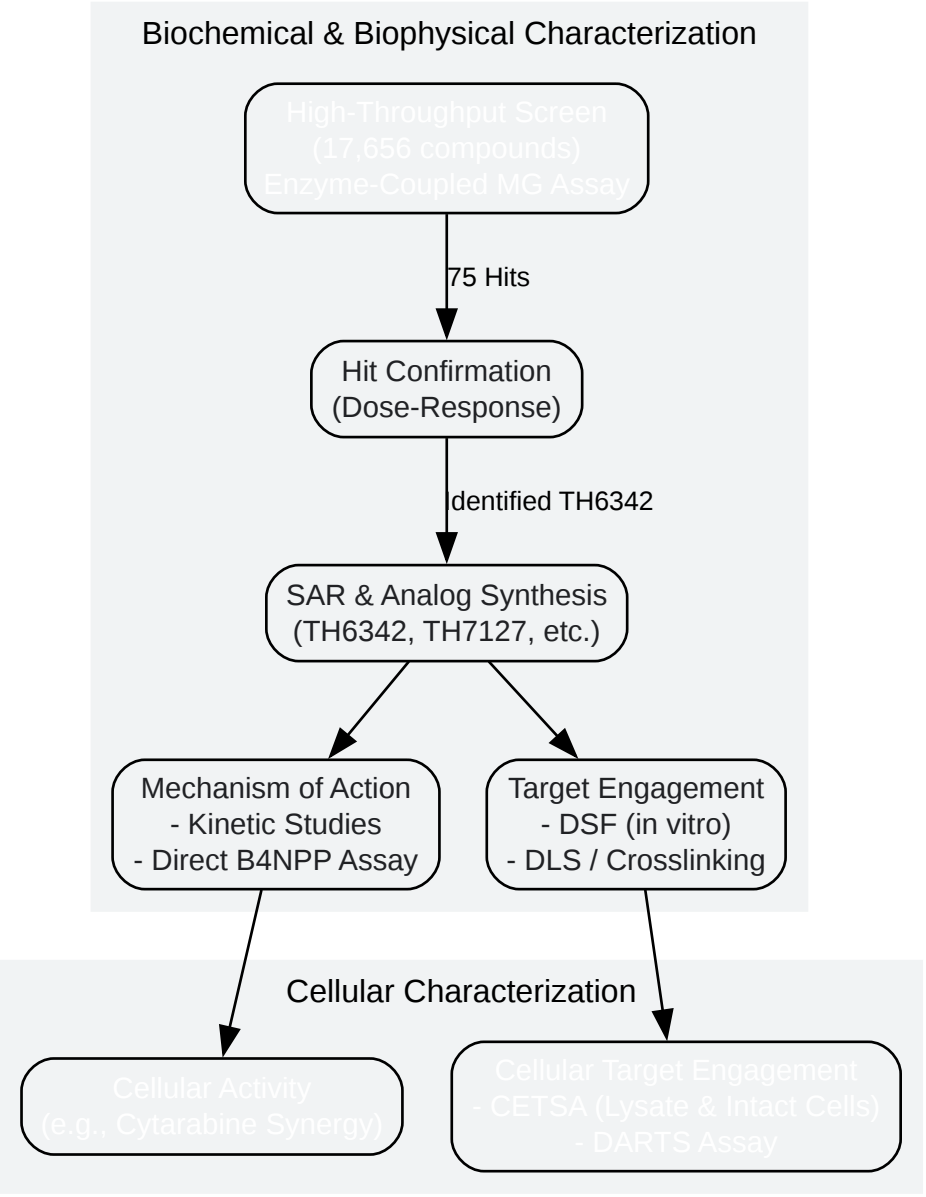

Click to download full resolution via product page

Caption: Experimental workflow for **TH6342** discovery and validation.

Enzyme-Coupled Malachite Green (MG) Assay

This assay was the primary method for high-throughput screening and determining the biochemical potency (IC_{50}) of inhibitors.[1][11]

- Principle: SAMHD1 hydrolyzes a dNTP substrate to produce deoxynucleoside and inorganic triphosphate (PPPi). A coupling enzyme, inorganic pyrophosphatase (PPase), then

© 2026 BenchChem. All rights reserved.

hydrolyzes the PPPi into three molecules of inorganic phosphate (Pi). The resulting Pi is detected by a malachite green (MG) reagent, which forms a colored complex that can be measured by absorbance at ~630 nm.[1][19]

- Protocol Outline:
  - Recombinant SAMHD1 (e.g., 0.35 µM) is pre-incubated with varying concentrations of the test compound (e.g., **TH6342**) in reaction buffer (e.g., 25 mM Tris-acetate pH 8, 40 mM NaCl, 1 mM $MgCl_2$, 0.005% Tween-20, 0.3 mM TCEP).[19]
  - The enzymatic reaction is initiated by adding the substrate (e.g., 25 µM dGTP) and an excess of E. coli PPase (e.g., 12.5 U/mL).[19]
  - The reaction proceeds at room temperature for a set time (e.g., 20 minutes).[19]
  - The reaction is stopped, and the MG reagent is added to detect the amount of Pi produced.
  - Absorbance is read at 630 nm, and the percentage of inhibition is calculated relative to a DMSO control.

Direct SAMHD1 Enzymatic Assay (B4NPP Substrate)

This orthogonal assay confirms direct inhibition of SAMHD1's catalytic activity without relying on a coupled enzyme.

- Principle: In the presence of manganese ions (Mn^{2+}), SAMHD1 can hydrolyze the artificial substrate bis(4-nitrophenyl) phosphate (B4NPP) to produce p-nitrophenyl phosphate (p-NPP) and p-nitrophenol (p-NP). The production of the chromogenic p-NP can be quantified by measuring absorbance at 410 nm.[1][8]
- Protocol Outline:
  - Recombinant SAMHD1 is incubated with varying concentrations of the inhibitor in a buffer containing Mn^{2+}.
  - The reaction is started by the addition of B4NPP.

© 2026 BenchChem. All rights reserved.

- Following incubation, the absorbance at 410 nm is measured to quantify p-NP production and determine the level of inhibition.[8]

Differential Scanning Fluorimetry (DSF)

DSF is a biophysical technique used to assess the direct binding of a ligand to a protein by measuring changes in its thermal stability.

- Principle: The stability of a protein against thermal denaturation is monitored in the presence of a fluorescent dye (e.g., SYPRO Orange) that binds to exposed hydrophobic regions of the unfolded protein. Ligand binding typically stabilizes the protein, resulting in an increase in the melting temperature (Tm). However, compounds that bind to less stable, pre-oligomeric states can also cause destabilization (a decrease in Tm).

- Protocol Outline:

  - Recombinant SAMHD1 is mixed with the fluorescent dye in a suitable buffer.

  - The test compound (**TH6342**) or a DMSO control is added to the mixture.

  - The sample is heated gradually in a real-time PCR instrument, and fluorescence is measured at each temperature increment.

  - The melting temperature (Tm) is determined from the midpoint of the unfolding transition curve. A shift in Tm (ΔTm) in the presence of the compound indicates direct binding.[1]

Cellular Thermal Shift Assay (CETSA)

CETSA measures target engagement in a cellular environment by applying the principle of ligand-induced thermal stabilization to cells or cell lysates.[14]

- Principle: When a protein binds to its ligand in a cell, it often becomes more resistant to heat-induced unfolding and aggregation. After heating, soluble, correctly folded protein can be separated from aggregated protein by centrifugation. The amount of soluble protein remaining at different temperatures is quantified, typically by Western blot.

- Protocol Outline (Cell Lysate):

© 2026 BenchChem. All rights reserved.

- Prepare cell lysates from a relevant cell line (e.g., THP-1 monocytes).[1][18]
- Incubate the lysate with the test compound (e.g., 100 µM **TH6342**) or DMSO vehicle control.
- Aliquot the treated lysate and heat the aliquots to a range of different temperatures (e.g., 40°C to 70°C).
- Centrifuge the samples to pellet aggregated proteins.
- Analyze the amount of soluble SAMHD1 remaining in the supernatant by Western blot.
- Plot the amount of soluble protein versus temperature to generate a melting curve and determine the aggregation temperature (Tagg). A shift in the curve indicates target engagement.[1]

Selectivity and Cellular Activity

TH6342 has demonstrated reasonable selectivity for SAMHD1. When tested at concentrations up to 100 µM, it showed minimal inhibition against a panel of other nucleotide phosphatases, highlighting its specificity.[1][13]

However, a significant limitation of the current chemotype is its cellular activity. While CETSA experiments confirmed that **TH6342** engages SAMHD1 in cell lysates, no significant engagement was observed in intact THP-1 cells.[1][18] This suggests that **TH6342** has low cell permeability.[13][18] Consequently, in cellular assays, **TH6342** did not potentiate the cytotoxic effects of cytarabine, an outcome that would be expected if it effectively inhibited intracellular SAMHD1.[13]

Conclusion and Future Directions

TH6342 is a validated chemical probe for studying the function and enzymology of SAMHD1 in vitro. Its unique allosteric mechanism of action, which deters the enzyme's oligomerization and activation without occupying nucleotide-binding sites, provides a powerful tool to investigate the dynamics of SAMHD1 regulation.[1][12][14] The availability of an inactive analog, TH7126, further strengthens its utility as a probe for well-controlled experiments.

© 2026 BenchChem. All rights reserved.

The primary challenge for this chemical series is its limited cell permeability, which currently restricts its use in living cells.[18] Future medicinal chemistry efforts will likely focus on optimizing the physicochemical properties of the **TH6342** scaffold to improve cellular uptake and potency. Success in this area could lead to the development of advanced probes for in vivo studies and potentially pave the way for a new class of therapeutic agents to be used as neoadjuvants in chemotherapy.

Need Custom Synthesis?

BenchChem offers custom synthesis for rare earth carbides and specific isotopiclabeling.

Email: info@benchchem.com or Request Quote Online.

References

- 1. Identification and evaluation of small-molecule inhibitors against the dNTPase SAMHD1 via a comprehensive screening funnel - PMC [pmc.ncbi.nlm.nih.gov]
- 2. researchgate.net [researchgate.net]
- 3. medchemexpress.com [medchemexpress.com]
- 4. Tetramerization of SAMHD1 Is Required for Biological Activity and Inhibition of HIV Infection - PMC [pmc.ncbi.nlm.nih.gov]
- 5. Allosteric Activation of SAMHD1 Protein by Deoxynucleotide Triphosphate (dNTP)-dependent Tetramerization Requires dNTP Concentrations That Are Similar to dNTP Concentrations Observed in Cycling T Cells - PMC [pmc.ncbi.nlm.nih.gov]
- 6. dNTP depletion and beyond: the multifaceted nature of SAMHD1-mediated viral restriction - PMC [pmc.ncbi.nlm.nih.gov]
- 7. Crystal structures of SAMHD1 inhibitor complexes reveal the mechanism of water-mediated dNTP hydrolysis - PMC [pmc.ncbi.nlm.nih.gov]
- 8. researchgate.net [researchgate.net]
- 9. researchgate.net [researchgate.net]
- 10. Allosteric Activation of SAMHD1 Protein by Deoxynucleotide Triphosphate (dNTP)-dependent Tetramerization Requires dNTP Concentrations That Are Similar to dNTP Concentrations Observed in Cycling T Cells - PubMed [pubmed.ncbi.nlm.nih.gov]
- 11. researchgate.net [researchgate.net]

© 2026 BenchChem. All rights reserved.

- 12. TH6342 | SAMHD1 inhibitor | Probechem Biochemicals [probechem.com]
- 13. researchgate.net [researchgate.net]
- 14. biorxiv.org [biorxiv.org]
- 15. medchemexpress.com [medchemexpress.com]
- 16. The N-terminal SAM domain of the dNTPase SAMHD1 is not required for inhibition by small molecule TH6342 - PubMed [pubmed.ncbi.nlm.nih.gov]
- 17. researchgate.net [researchgate.net]
- 18. researchgate.net [researchgate.net]
- 19. tandfonline.com [tandfonline.com]

- To cite this document: BenchChem. [TH6342: A Technical Guide to a Novel Chemical Probe for SAMHD1 Function]. BenchChem, [2026]. [Online PDF]. Available at: [https://www.benchchem.com/product/b12386964/docs#th6342-a-technical-guide-to-a-novel-chemical-probe-for-samhd1-function]

Disclaimer & Data Validity:

The information provided in this document is for Research Use Only (RUO) and is strictly not intended for diagnostic or therapeutic procedures. While BenchChem strives to provide accurate protocols, we make no warranties, express or implied, regarding the fitness of this product for every specific experimental setup.

Technical Support: The protocols provided are for reference purposes. Unsure if this reagent suits your experiment?

Need Industrial/Bulk Grade? Request Custom Synthesis Quote

BenchChem

Our mission is to be the trusted global source of essential and advanced chemicals, empowering scientists and researchers to drive progress in science and industry.

Contact

Address: 3281 E Guasti Rd

Ontario, CA 91761, United States

Phone: (601) 213-4426

Email: info@benchchem.com

© 2026 BenchChem. All rights reserved.

Contact our Ph.D. Support Team for a compatibility check

© 2026 BenchChem. All rights reserved.