optimizing YQA14 dosage to avoid locomotor impairment

Author: BenchChem Technical Support Team. **Date**: April 2026

Compound of Interest

Compound Name:	*YQA14*
Cat. No.:	*B12381258*

Get Quote

Technical Support Center: YQA14 Dosage Optimization

This technical support center provides researchers, scientists, and drug development professionals with guidance on optimizing the dosage of **YQA14** to avoid locomotor impairment during preclinical studies.

Frequently Asked Questions (FAQs)

Q1: What is **YQA14** and what is its primary mechanism of action?

A1: **YQA14** is a novel and selective dopamine D3 receptor antagonist.[1][2] Its primary mechanism of action is the blockade of dopamine D3 receptors, which are implicated in drug reward and addiction.[1][3]

Q2: What is the potential therapeutic application of **YQA14**?

A2: Preclinical studies suggest that **YQA14** has potential as a pharmacotherapeutic agent for treating cocaine addiction by attenuating cocaine-taking and cocaine-seeking behaviors.[4][5]

© 2026 BenchChem. All rights reserved.

Q3: Does **YQA14** cause locomotor impairment?

A3: Yes, at high doses, **YQA14** can cause locomotor impairment. Studies in rats have shown that a dose of 50 mg/kg significantly inhibits both basal and cocaine-enhanced locomotion.[1][2][3][6]

Q4: At what doses is **YQA14** effective without causing locomotor side effects?

A4: In rats, systemic administration of **YQA14** at doses between 6.25 mg/kg and 25 mg/kg has been shown to be effective in reducing cocaine self-administration without significantly altering locomotor activity.[1][2][3]

Q5: What is the suspected mechanism behind **YQA14**-induced locomotor impairment at high doses?

A5: The locomotor impairment observed at high doses of **YQA14** is thought to be a non-D3 receptor-mediated effect. It is hypothesized that at higher concentrations, **YQA14** may lose its selectivity and interact with other receptors, such as dopamine D2 receptors, which play a crucial role in motor control.[3]

Troubleshooting Guide: Locomotor Impairment Observed in Experiments

This guide is designed to help researchers troubleshoot experiments where locomotor impairment is an unintended side effect of **YQA14** administration.

© 2026 BenchChem. All rights reserved.

Issue	Potential Cause	Recommended Action
Observation: Significant reduction in spontaneous movement, distance traveled, or rearing frequency in animals treated with YQA14.	The administered dose of YQA14 is too high, likely exceeding 25 mg/kg in rats.	1. Review the current dosage and compare it with the established therapeutic window (6.25-25 mg/kg in rats). 2. Perform a dose-response study to identify the minimal effective dose that does not produce locomotor deficits. 3. Ensure accurate calculation and administration of the intended dose.
Observation: Animals appear sedated or show signs of motor deficits after YQA14 administration.	Off-target effects at higher concentrations, potentially involving dopamine D2 receptor antagonism.	1. Lower the dose of YQA14 to a range where it maintains high selectivity for the D3 receptor. 2. If the therapeutic effect is lost at lower doses, consider co-administration with a D2 receptor agonist, though this may complicate the experimental design and interpretation. 3. Evaluate alternative D3 receptor antagonists with a better selectivity profile if available.
Observation: Inconsistent or variable locomotor activity across a cohort of animals receiving the same dose of YQA14.	Factors such as animal strain, age, sex, or metabolic differences may influence the drug's effect.	1. Ensure a homogenous animal population for the study. 2. Increase the sample size to improve statistical power and account for individual variability. 3. Acclimate the animals to the testing environment thoroughly before the experiment to reduce stress-induced variability.

© 2026 BenchChem. All rights reserved.

Data Summary: YQA14 Dosage and Locomotor Effects in Rats

The following table summarizes the quantitative data from preclinical studies on the effects of **YQA14** on locomotor activity in rats.

Dosage (mg/kg, i.p.)	Effect on Basal Locomotion	Effect on Cocaine-Enhanced Locomotion	Reference
6.25 - 25	No significant alteration	No significant alteration	[1][2][3]
50	Significant inhibition	Significant inhibition	[1][2][3][6]

Experimental Protocols

Assessment of Locomotor Activity in Rodents

This protocol outlines a standard method for evaluating the effect of **YQA14** on locomotor activity in rats.

1. Animals:

- Male Long-Evans rats (or other appropriate strain) weighing 250-300g at the start of the experiment.
- House animals individually in a temperature- and humidity-controlled environment with a 12-hour light/dark cycle. Provide ad libitum access to food and water.
- Allow at least one week of acclimatization to the housing facility before any experimental procedures.

2. Apparatus:

- Use standard locomotor activity chambers (e.g., 40 x 40 x 30 cm) equipped with infrared beams to automatically record animal movement.

© 2026 BenchChem. All rights reserved.

- The chambers should be placed in a sound-attenuated and dimly lit room.

3. Habituation:

- To minimize novelty-induced hyperactivity, habituate the animals to the locomotor activity chambers for 60 minutes for 2-3 consecutive days before the test day.

4. Drug Administration:

- Prepare **YQA14** in a suitable vehicle (e.g., 25% 2-hydroxypropyl-β-cyclodextrin in saline).
- Administer **YQA14** or vehicle via intraperitoneal (i.p.) injection at a volume of 1 ml/kg.
- A typical dose-response study might include vehicle, 12.5, 25, and 50 mg/kg of **YQA14**.

5. Experimental Procedure:

- On the test day, administer the assigned dose of **YQA14** or vehicle to the animals.
- Immediately place the animals into the locomotor activity chambers.
- Record locomotor activity (e.g., total distance traveled, horizontal beam breaks, vertical beam breaks for rearing) for a predefined period, typically 60-120 minutes.

6. Data Analysis:

- Analyze the collected data using appropriate statistical methods, such as a one-way ANOVA, to compare the effects of different doses of **YQA14** with the vehicle control group.
- A p-value of less than 0.05 is typically considered statistically significant.

Visualizations

© 2026 BenchChem. All rights reserved.

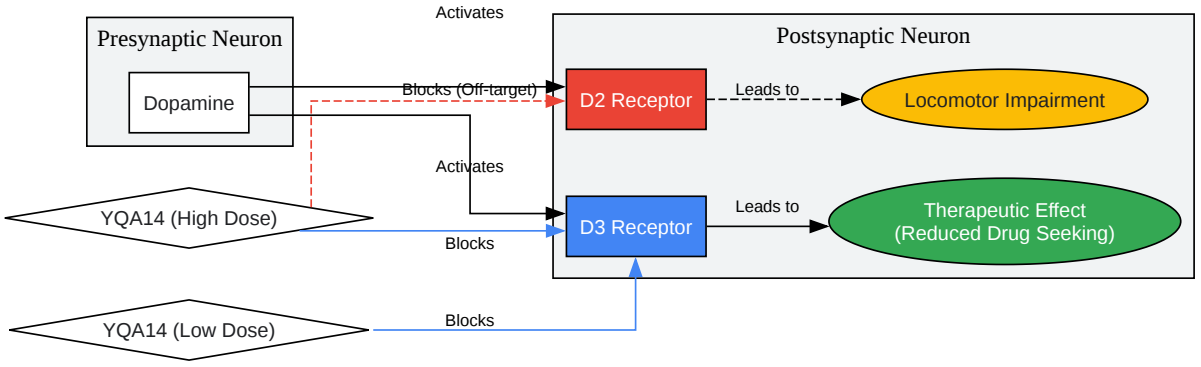

Click to download full resolution via product page

Caption: Proposed signaling pathway of **YQA14** at different dosages.

© 2026 BenchChem. All rights reserved.

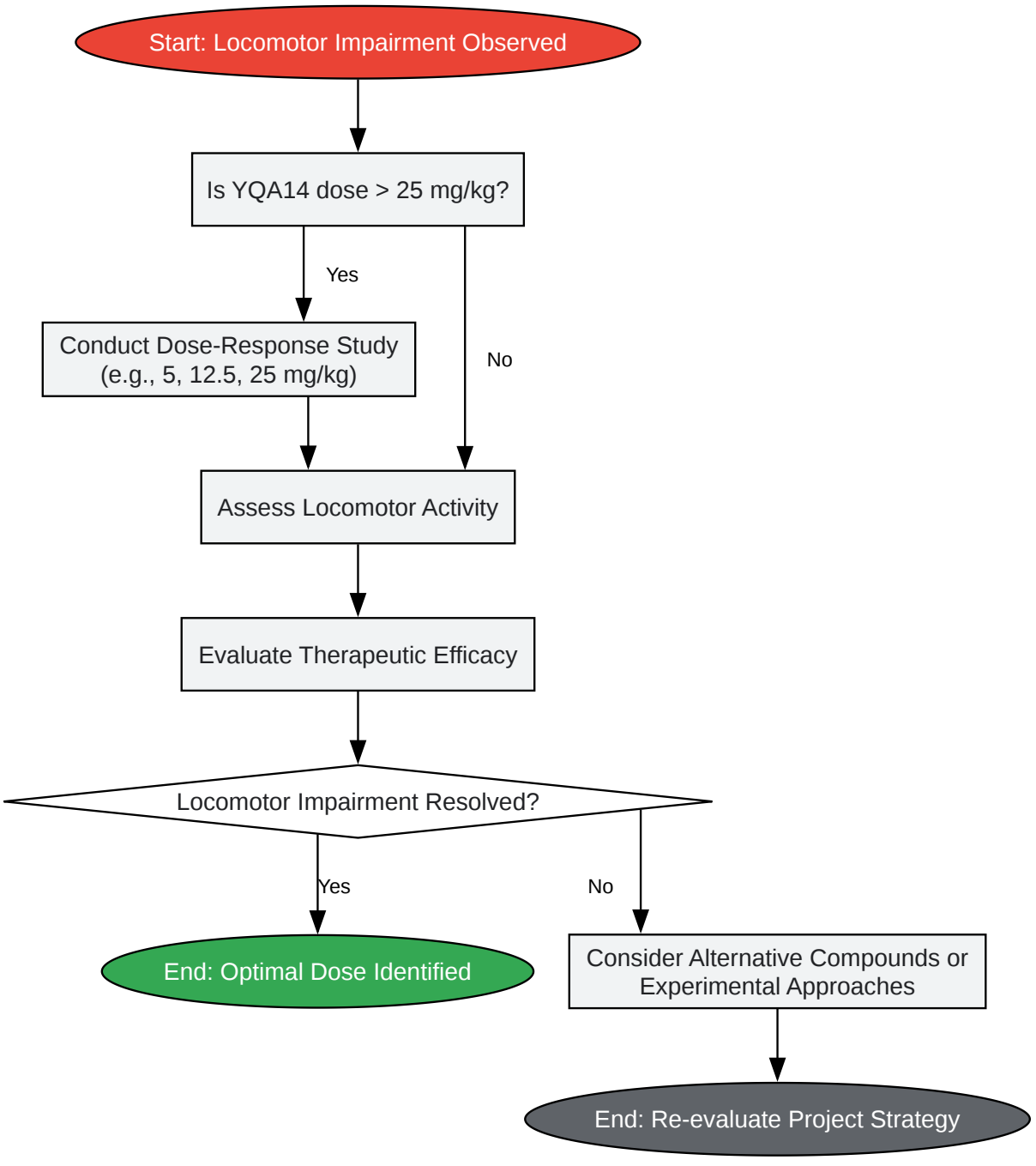

Click to download full resolution via product page

Caption: Troubleshooting workflow for **YQA14**-induced locomotor impairment.

© 2026 BenchChem. All rights reserved.

Need Custom Synthesis?

BenchChem offers custom synthesis for rare earth carbides and specific isotopiclabeling.

Email: info@benchchem.com or Request Quote Online.

References

- 1. YQA14: a novel dopamine D3 receptor antagonist that inhibits cocaine self-administration in rats and mice, but not in D3 receptor-knockout mice - PubMed [pubmed.ncbi.nlm.nih.gov]
- 2. researchgate.net [researchgate.net]
- 3. YQA14: a novel dopamine D3 receptor antagonist that inhibits cocaine self-administration in rats and mice, but not in D3 receptor-knockout mice - PMC [pmc.ncbi.nlm.nih.gov]
- 4. Blockade of D3 Receptors by YQA14 Inhibits Cocaine's Rewarding Effects and Relapse to Drug-Seeking Behavior in Rats - PMC [pmc.ncbi.nlm.nih.gov]
- 5. Blockade of D3 receptors by YQA14 inhibits cocaine's rewarding effects and relapse to drug-seeking behavior in rats - PubMed [pubmed.ncbi.nlm.nih.gov]
- 6. researchgate.net [researchgate.net]

- To cite this document: BenchChem. [optimizing YQA14 dosage to avoid locomotor impairment]. BenchChem, [2026]. [Online PDF]. Available at: [https://www.benchchem.com/product/b12381258/docs#optimizing-yqa14-dosage-to-avoid-locomotor-impairment]

Disclaimer & Data Validity:

The information provided in this document is for Research Use Only (RUO) and is strictly not intended for diagnostic or therapeutic procedures. While BenchChem strives to provide accurate protocols, we make no warranties, express or implied, regarding the fitness of this product for every specific experimental setup.

Technical Support: The protocols provided are for reference purposes. Unsure if this reagent suits your experiment?

Need Industrial/Bulk Grade? Request Custom Synthesis Quote

© 2026 BenchChem. All rights reserved.

BenchChem

Our mission is to be the trusted global source of essential and advanced chemicals, empowering scientists and researchers to drive progress in science and industry.

Contact

Address: 3281 E Guasti Rd

Ontario, CA 91761, United States

Phone: (601) 213-4426

Email: info@benchchem.com

Contact our Ph.D. Support Team for a compatibility check

© 2026 BenchChem. All rights reserved.