# Application Notes and Protocols: Multi-kinase-IN-4 for Chemical Proteomics Approaches

**Author**: BenchChem Technical Support Team. **Date**: April 2026

***Compound of Interest***

| | |
|---|---|
| *Compound Name:* | *Multi-kinase-IN-4* |
| *Cat. No.:* | *B12381351* |

*Get Quote*

For Researchers, Scientists, and Drug Development Professionals.

## Introduction

**Multi-kinase-IN-4** is a potent, broad-spectrum kinase inhibitor designed for use in chemical proteomics to elucidate kinase signaling pathways and identify kinase targets of novel drug candidates. Its multi-targeted nature makes it an effective tool for enriching a significant portion of the cellular kinome, enabling comprehensive profiling of kinase expression and activity. This document provides detailed protocols for utilizing **Multi-kinase-IN-4** in chemical proteomics workflows, along with representative data and pathway analysis.

Chemical proteomics is a powerful technique that employs immobilized small molecules to capture their protein targets from complex biological samples, such as cell or tissue lysates.[1][2][3] The captured proteins are then identified and quantified using mass spectrometry. This approach allows for the unbiased identification of drug-protein interactions in a native-like environment.[2] Multiplexed kinase inhibitor beads, like those prepared with **Multi-kinase-IN-4**, are used for large-scale quantitative kinome profiling.[1]

## Applications

© 2026 BenchChem. All rights reserved.

- Target Deconvolution: Identify the cellular targets and off-targets of novel kinase inhibitors through competitive binding assays.
- Kinome Profiling: Profile the expression and activity state of a broad range of kinases across different cell lines or disease models.[1][4]
- Signaling Pathway Analysis: Investigate the modulation of signaling pathways upon drug treatment or other cellular perturbations.[1]
- Biomarker Discovery: Identify kinases or signaling pathways associated with specific cellular phenotypes or drug responses.

## Quantitative Data: Target Profile of **Multi-kinase-IN-4**

The following table summarizes the binding affinities of **Multi-kinase-IN-4** to a panel of representative kinases, as determined by competitive binding experiments followed by quantitative mass spectrometry.

© 2026 BenchChem. All rights reserved.

| Kinase Target | Gene Symbol | Kinase Family | Dissociation Constant (Kd) (nM) |
|---|---|---|---|
| Abelson murine leukemia viral oncogene homolog 1 | ABL1 | Tyrosine Kinase | 25 |
| SRC proto-oncogene, non-receptor tyrosine kinase | SRC | Tyrosine Kinase | 15 |
| LYN proto-oncogene, Src family tyrosine kinase | LYN | Tyrosine Kinase | 30 |
| YES proto-oncogene 1, Src family tyrosine kinase | YES1 | Tyrosine Kinase | 20 |
| Cyclin-dependent kinase 1 | CDK1 | CMGC | 50 |
| Cyclin-dependent kinase 2 | CDK2 | CMGC | 45 |
| Cyclin-dependent kinase 4 | CDK4 | CMGC | 150 |
| Cyclin-dependent kinase 6 | CDK6 | CMGC | 180 |
| Mitogen-activated protein kinase 1 | MAPK1 | CMGC | 120 |
| Mitogen-activated protein kinase 3 | MAPK3 | CMGC | 100 |
| Mitogen-activated protein kinase kinase 4 | MAP2K4 | STE | 80 |
| Vascular endothelial growth factor receptor | KDR | Tyrosine Kinase | 40 |

© 2026 BenchChem. All rights reserved.

| | | | |
|---|---|---|---|
| 2 | | | |
| FMS-related tyrosine kinase 3 | FLT3 | Tyrosine Kinase | 60 |

# Experimental Protocols

## Protocol 1: Preparation of **Multi-kinase-IN-4** Affinity Resin

This protocol describes the covalent immobilization of **Multi-kinase-IN-4** to a solid support (e.g., Sepharose beads) to create an affinity resin for pulldown experiments. A successful chemical proteomics experiment relies on the effective covalent linkage of the kinase inhibitor to a resin.[2]

Materials:

- **Multi-kinase-IN-4** with a suitable linker (e.g., containing a primary amine)
- NHS-activated Sepharose beads
- Coupling buffer (e.g., 0.1 M NaHCO3, 0.5 M NaCl, pH 8.3)
- Blocking buffer (e.g., 100 mM Tris-HCl, pH 8.0)
- Wash buffer (e.g., PBS)
- Dimethylformamide (DMF)

Procedure:

- Dissolve **Multi-kinase-IN-4** in a minimal amount of DMF.
- Wash the NHS-activated Sepharose beads with ice-cold 1 mM HCl.
- Immediately add the dissolved **Multi-kinase-IN-4** to the beads in coupling buffer.
- Incubate the mixture overnight at 4°C with gentle rotation.

© 2026 BenchChem. All rights reserved.

- Centrifuge the beads and discard the supernatant.
- Block any remaining active groups by incubating the beads with blocking buffer for 2 hours at room temperature.
- Wash the beads extensively with wash buffer to remove any non-covalently bound inhibitor.
- Resuspend the beads in a storage buffer (e.g., PBS with 20% ethanol) and store at 4°C.

## Protocol 2: Chemical Proteomics Pulldown Assay

This protocol outlines the procedure for enriching kinases from a cell lysate using the prepared **Multi-kinase-IN-4** affinity resin.

Materials:

- **Multi-kinase-IN-4** affinity resin
- Cell lysis buffer (e.g., 50 mM Tris-HCl pH 7.5, 150 mM NaCl, 1 mM EDTA, 1% NP-40, protease and phosphatase inhibitors)
- Cultured cells of interest
- Wash buffer (e.g., lysis buffer without detergent)
- Elution buffer (e.g., 0.1 M glycine pH 2.5, or 2X SDS-PAGE sample buffer)
- Microcentrifuge tubes

Procedure:

- Cell Lysis:
  - Harvest cultured cells and wash with ice-cold PBS.
  - Lyse the cells in ice-cold lysis buffer for 30 minutes on ice.
  - Clarify the lysate by centrifugation at 14,000 x g for 15 minutes at 4°C.

© 2026 BenchChem. All rights reserved.

- Determine the protein concentration of the supernatant (e.g., using a BCA assay).

- Affinity Enrichment:
  - Equilibrate the **Multi-kinase-IN-4** affinity resin with lysis buffer.
  - Incubate the cell lysate (e.g., 1-5 mg of total protein) with the equilibrated beads for 2-4 hours at 4°C with gentle rotation.

- Washing:
  - Centrifuge the beads at a low speed and discard the supernatant.
  - Wash the beads three times with wash buffer to remove non-specific binders.

- Elution:
  - Elute the bound proteins from the beads using elution buffer. For mass spectrometry analysis, elution with SDS-PAGE sample buffer followed by in-gel digestion is a common method.

## Protocol 3: Sample Preparation for Mass Spectrometry

This protocol provides a general workflow for preparing the eluted proteins for analysis by mass spectrometry.

Procedure:

- SDS-PAGE and In-Gel Digestion:
  - Separate the eluted proteins by SDS-PAGE.
  - Stain the gel with a mass spectrometry-compatible stain (e.g., Coomassie blue).
  - Excise the entire protein lane or specific bands of interest.
  - Destain the gel pieces and perform in-gel digestion with trypsin overnight at 37°C.

- Peptide Extraction and Desalting:

© 2026 BenchChem. All rights reserved.

- Extract the tryptic peptides from the gel pieces using a series of acetonitrile and formic acid washes.
- Pool the extracts and dry them in a vacuum centrifuge.
- Desalt the peptides using a C18 StageTip or ZipTip.

- LC-MS/MS Analysis:
  - Reconstitute the desalted peptides in a suitable buffer for mass spectrometry.
  - Analyze the peptides by liquid chromatography-tandem mass spectrometry (LC-MS/MS).

# Visualizations

## Signaling Pathway Diagram

© 2026 BenchChem. All rights reserved.

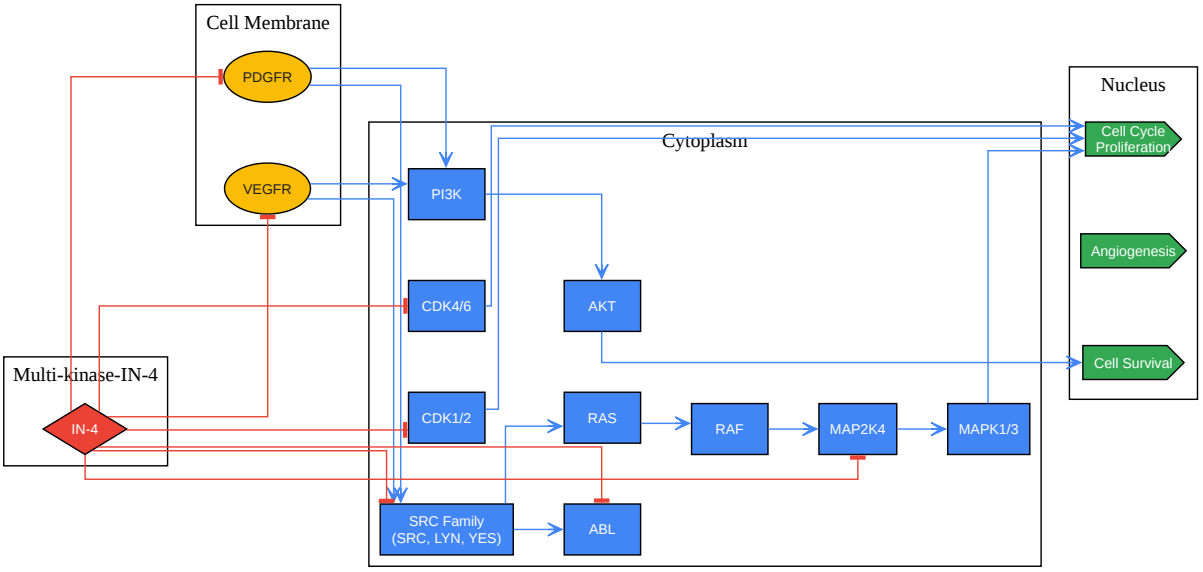


Click to download full resolution via product page

Caption: Signaling pathways targeted by **Multi-kinase-IN-4**.

## Experimental Workflow Diagram

© 2026 BenchChem. All rights reserved.

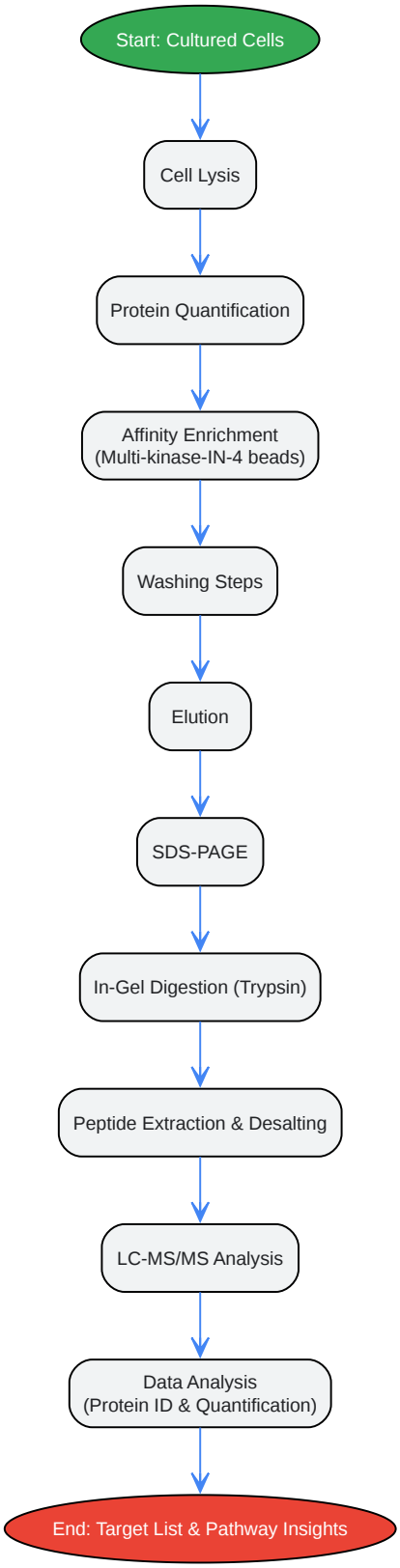


Click to download full resolution via product page

Caption: Chemical proteomics workflow using **Multi-kinase-IN-4**.

© 2026 BenchChem. All rights reserved.

***Need Custom Synthesis?***

*BenchChem offers custom synthesis for rare earth carbides and specific isotopiclabeling.*

*Email: info@benchchem.com or Request Quote Online.*

# References

- 1. pubs.acs.org [pubs.acs.org]
- 2. researchgate.net [researchgate.net]
- 3. A Miniaturized Chemical Proteomic Approach for Target Profiling of Clinical Kinase Inhibitors in Tumor Biopsies - PMC [pmc.ncbi.nlm.nih.gov]
- 4. pubs.acs.org [pubs.acs.org]
- To cite this document: BenchChem. [Application Notes and Protocols: Multi-kinase-IN-4 for Chemical Proteomics Approaches]. BenchChem, [2026]. [Online PDF]. Available at: [https://www.benchchem.com/product/b12381351/docs#application-notes-and-protocols-multi-kinase-in-4-for-chemical-proteomics-approaches]

---

**Disclaimer & Data Validity:**

The information provided in this document is for Research Use Only (RUO) and is strictly not intended for diagnostic or therapeutic procedures. While BenchChem strives to provide accurate protocols, we make no warranties, express or implied, regarding the fitness of this product for every specific experimental setup.

**Technical Support:**The protocols provided are for reference purposes. Unsure if this reagent suits your experiment?

**Need Industrial/Bulk Grade?** Request Custom Synthesis Quote

# BenchChem

Our mission is to be the trusted global source of essential and advanced chemicals, empowering scientists and researchers to drive progress in science and industry.

Contact

Address: 3281 E Guasti Rd

Ontario, CA 91761, United States

Phone: (601) 213-4426

Email: info@benchchem.com

Contact our Ph.D. Support Team for a compatibility check

© 2026 BenchChem. All rights reserved.