The Molecular Target of Sec61-IN-5: An In-depth Technical Guide

Author: BenchChem Technical Support Team. **Date**: April 2026

Compound of Interest

Compound Name: *Sec61-IN-5*

Cat. No.: *B12380923*

Get Quote

For Researchers, Scientists, and Drug Development Professionals

Executive Summary

Sec61-IN-5 is a small molecule inhibitor whose molecular target is the Sec61 protein translocation complex, a critical component of the cellular machinery responsible for protein secretion and membrane protein integration. By binding to the central pore-forming subunit, Sec61α, **Sec61-IN-5** allosterically stabilizes the translocon in a closed conformation. This action effectively blocks the passage of newly synthesized polypeptides into the endoplasmic reticulum (ER), leading to their accumulation in the cytosol. The disruption of protein homeostasis triggers the Unfolded Protein Response (UPR), a cellular stress pathway that can ultimately induce apoptosis, particularly in cells with high secretory activity such as cancer cells. This guide provides a comprehensive overview of the molecular target of **Sec61-IN-5**, its mechanism of action, quantitative data for a closely related analog, detailed experimental protocols for its characterization, and visualizations of the relevant biological pathways and experimental workflows.

The Sec61 Translocon: The Molecular Target

© 2026 BenchChem. All rights reserved.

The Sec61 translocon is a heterotrimeric protein complex embedded in the membrane of the endoplasmic reticulum.[1] It is the primary channel for the co-translational and post-translational translocation of proteins destined for the secretory pathway or for insertion into the ER membrane. The complex consists of three subunits:

- Sec61α: The largest subunit, forming the central aqueous pore through which polypeptides pass. It consists of ten transmembrane helices and contains a "plug" domain that seals the channel when inactive and a "lateral gate" that opens to allow the integration of transmembrane domains into the lipid bilayer.[1][2]
- Sec61β and Sec61γ: Smaller, single-pass transmembrane proteins that associate with Sec61α and are important for the stability and function of the complex.

Sec61-IN-5, like other inhibitors in its class, directly targets the Sec61α subunit.[3] This interaction is non-covalent and is believed to occur at a lipid-exposed pocket near the lateral gate and the plug domain.[4]

Mechanism of Action

The inhibitory action of **Sec61-IN-5** is achieved by stabilizing the Sec61 translocon in a translocation-incompetent state. The binding of the inhibitor to Sec61α prevents the conformational changes necessary for channel opening upon engagement with a ribosome-nascent chain complex. Specifically, it is thought to "cement" the plug domain in its closed position, thereby physically obstructing the polypeptide-conducting channel. This leads to a halt in the translocation of a wide range of secretory and membrane proteins.

The accumulation of untranslocated precursor proteins in the cytoplasm disrupts cellular proteostasis and induces the Unfolded Protein Response (UPR). The UPR is a complex signaling network that aims to restore ER homeostasis but can trigger apoptosis if the stress is prolonged or severe.

Quantitative Data

While specific quantitative data for **Sec61-IN-5** is not readily available in the public domain, data for the closely related analog, Sec61-IN-4, provides valuable insight into the potency of this class of inhibitors.

© 2026 BenchChem. All rights reserved.

Compound	Target/Assay	Cell Line	IC50 (nM)
Sec61-IN-4	Cell Viability	U87-MG	0.04

Note: This data is for Sec61-IN-4 and is presented as a representative value for this inhibitor class. Further experimental validation is required for **Sec61-IN-5**.

Signaling Pathway and Experimental Workflows

Signaling Pathway: Sec61 Inhibition and Induction of the Unfolded Protein Response (UPR)

The inhibition of the Sec61 translocon by **Sec61-IN-5** leads to the activation of the UPR. This signaling cascade is initiated by three ER-resident transmembrane proteins: IRE1α, PERK, and ATF6.

© 2026 BenchChem. All rights reserved.

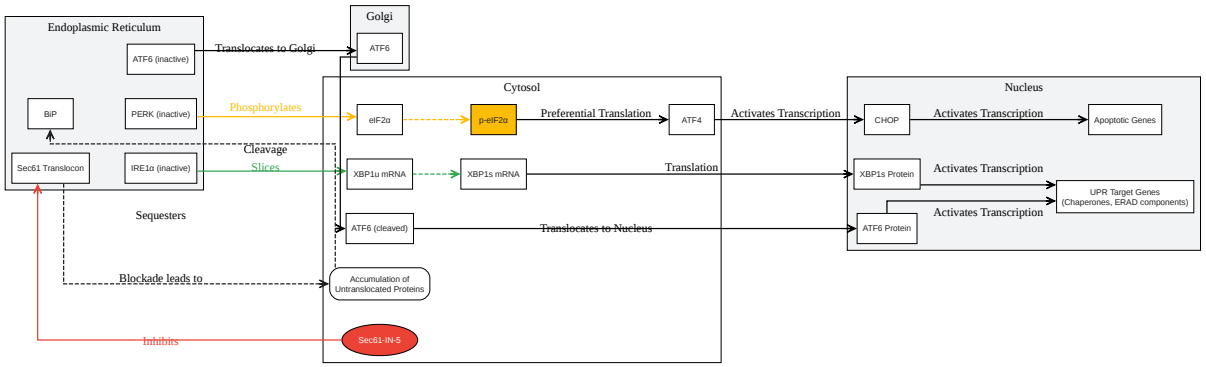

Click to download full resolution via product page

Caption: Inhibition of Sec61 by **Sec61-IN-5** leads to the activation of the Unfolded Protein Response (UPR).

Experimental Workflows

This assay directly assesses the ability of **Sec61-IN-5** to inhibit the translocation of a nascent polypeptide into ER-derived microsomes.

© 2026 BenchChem. All rights reserved.

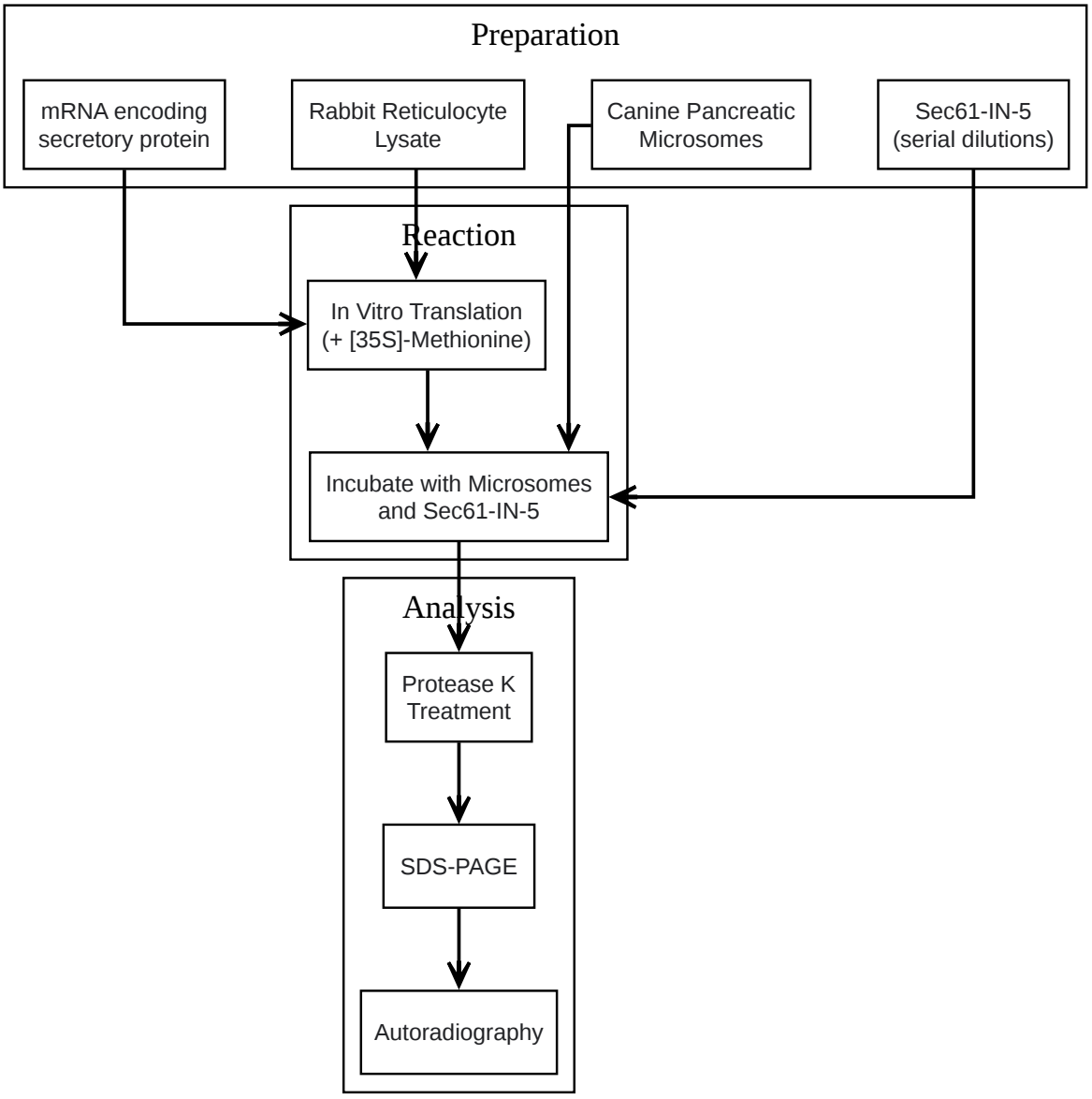

Click to download full resolution via product page

Caption: Workflow for an in vitro protein translocation assay to evaluate **Sec61-IN-5** activity.

CETSA is a biophysical method used to verify the direct binding of a ligand to its target protein in a cellular context. Ligand binding typically increases the thermal stability of the target protein.

© 2026 BenchChem. All rights reserved.

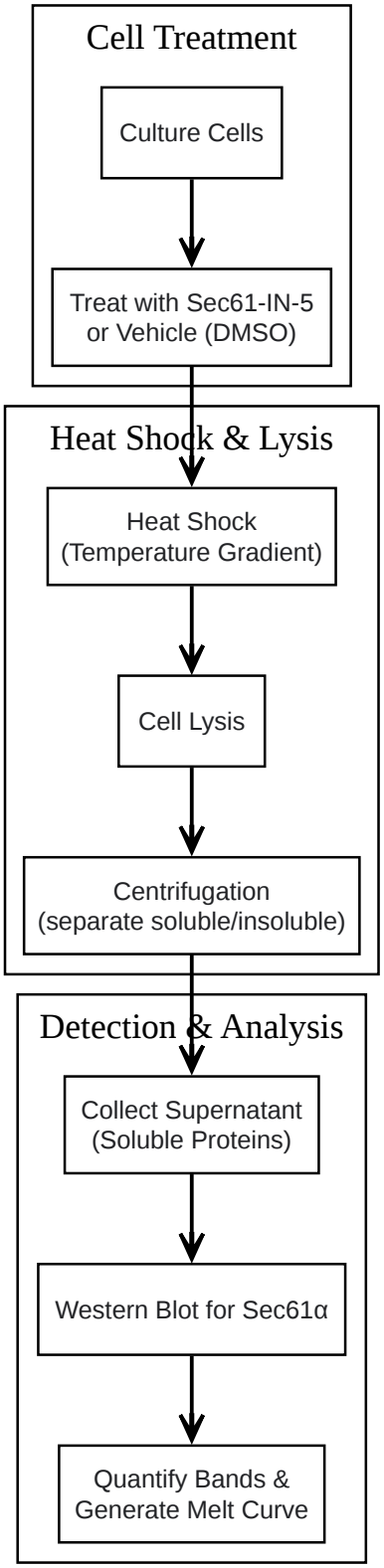

Click to download full resolution via product page

© 2026 BenchChem. All rights reserved.

Caption: Workflow for a Cellular Thermal Shift Assay (CETSA) to confirm **Sec61-IN-5** target engagement.

Experimental Protocols

In Vitro Protein Translocation Assay

Objective: To determine the concentration-dependent inhibition of protein translocation into microsomes by **Sec61-IN-5**.

Materials:

- Rabbit reticulocyte lysate
- Canine pancreatic rough microsomes (salt-washed)
- [35S]-Methionine
- Plasmid encoding a secretory protein (e.g., preprolactin)
- T7 RNA polymerase and transcription buffer
- RNase inhibitor
- Amino acid mixture (minus methionine)
- **Sec61-IN-5** stock solution in DMSO
- Proteinase K
- PMSF (phenylmethylsulfonyl fluoride)
- SDS-PAGE gels and buffers
- Autoradiography film or digital imager

Procedure:

© 2026 BenchChem. All rights reserved.

- In Vitro Transcription: Synthesize mRNA from the linearized plasmid using T7 RNA polymerase. Purify the mRNA.
- In Vitro Translation/Translocation: a. Set up translation reactions containing rabbit reticulocyte lysate, amino acid mixture (minus methionine), [35S]-Methionine, and the synthesized mRNA. b. To each reaction, add canine pancreatic microsomes. c. Add **Sec61-IN-5** at a range of final concentrations (e.g., 0.1 nM to 10 µM) or vehicle control (DMSO). d. Incubate at 30°C for 60 minutes.
- Protease Protection: a. Divide each reaction into two aliquots. To one aliquot, add Proteinase K and incubate on ice for 30 minutes. b. Stop the digestion by adding PMSF.
- Analysis: a. Analyze all samples by SDS-PAGE. b. Dry the gel and expose it to autoradiography film or a digital imager. c. Successful translocation results in a protected, faster-migrating band (due to signal peptide cleavage) in the Proteinase K-treated samples. Quantify the intensity of this band to determine the extent of inhibition.

Cellular Thermal Shift Assay (CETSA)

Objective: To demonstrate direct binding of **Sec61-IN-5** to Sec61α in intact cells.

Materials:

- Cultured cells (e.g., HEK293T or a relevant cancer cell line)
- Cell culture medium and supplements
- **Sec61-IN-5** stock solution in DMSO
- PBS (phosphate-buffered saline)
- Lysis buffer (e.g., RIPA buffer with protease inhibitors)
- Antibody specific for Sec61α
- HRP-conjugated secondary antibody
- Western blotting reagents and equipment

© 2026 BenchChem. All rights reserved.

Procedure:

- Cell Treatment: a. Seed cells in culture plates and grow to ~80% confluency. b. Treat cells with **Sec61-IN-5** at a fixed concentration (e.g., 1 µM) or vehicle control (DMSO) for 1-2 hours at 37°C.
- Heat Treatment: a. Harvest and wash the cells with PBS. Resuspend in PBS. b. Aliquot the cell suspension into PCR tubes. c. Heat the tubes at a range of temperatures (e.g., 40°C to 70°C in 2-3°C increments) for 3 minutes in a thermal cycler, followed by cooling at room temperature for 3 minutes.
- Lysis and Fractionation: a. Lyse the cells by freeze-thaw cycles or by adding lysis buffer. b. Centrifuge the lysates at high speed (e.g., 20,000 x g) for 20 minutes at 4°C to pellet aggregated proteins.
- Western Blot Analysis: a. Collect the supernatant (soluble protein fraction). b. Determine the protein concentration of each sample. c. Analyze equal amounts of protein from each sample by SDS-PAGE and Western blotting using an anti-Sec61α antibody.
- Data Analysis: a. Quantify the band intensities for Sec61α at each temperature. b. Normalize the intensities to the non-heated control for both treated and untreated samples. c. Plot the relative amount of soluble Sec61α against temperature to generate melting curves. A shift in the melting curve to a higher temperature for the **Sec61-IN-5**-treated sample indicates target engagement.

Cell Viability Assay

Objective: To determine the cytotoxic effect of **Sec61-IN-5** on a given cell line and calculate its IC50 value.

Materials:

- Cultured cells
- 96-well cell culture plates
- Cell culture medium and supplements

© 2026 BenchChem. All rights reserved.

- **Sec61-IN-5** stock solution in DMSO
- Cell viability reagent (e.g., CellTiter-Glo®, MTT, or similar)

Procedure:

- Cell Seeding: Seed cells in a 96-well plate at a predetermined density and allow them to adhere overnight.
- Compound Treatment: a. Prepare serial dilutions of **Sec61-IN-5** in cell culture medium. b. Treat the cells with the different concentrations of the inhibitor. Include a vehicle control (DMSO).
- Incubation: Incubate the plate for a specified period (e.g., 72 hours) at 37°C.
- Viability Measurement: Add the cell viability reagent to each well according to the manufacturer's protocol and measure the signal (luminescence, absorbance, etc.) using a plate reader.
- Data Analysis: a. Normalize the data to the vehicle control. b. Plot the percentage of cell viability against the logarithm of the inhibitor concentration. c. Fit the data to a dose-response curve to determine the IC50 value.

Conclusion

Sec61-IN-5 is a potent inhibitor of the Sec61 translocon, targeting the central Sec61α subunit to block protein translocation into the endoplasmic reticulum. This mechanism of action leads to the induction of the Unfolded Protein Response and subsequent apoptosis, highlighting its therapeutic potential, particularly in oncology. The experimental protocols and workflows detailed in this guide provide a robust framework for the characterization and further investigation of **Sec61-IN-5** and other inhibitors of this critical cellular pathway.

Need Custom Synthesis?

BenchChem offers custom synthesis for rare earth carbides and specific isotopiclabeling.

Email: info@benchchem.com or Request Quote Online.

References

- 1. Sec61 - Wikipedia [en.wikipedia.org]
- 2. Inhibitors of the Sec61 Complex and Novel High Throughput Screening Strategies to Target the Protein Translocation Pathway - PMC [pmc.ncbi.nlm.nih.gov]
- 3. benchchem.com [benchchem.com]
- 4. A common mechanism of Sec61 translocon inhibition by small molecules - PMC [pmc.ncbi.nlm.nih.gov]

- To cite this document: BenchChem. [The Molecular Target of Sec61-IN-5: An In-depth Technical Guide]. BenchChem, [2026]. [Online PDF]. Available at: [https://www.benchchem.com/product/b12380923/docs#the-molecular-target-of-sec61-in-5-an-in-depth-technical-guide]

Disclaimer & Data Validity:

The information provided in this document is for Research Use Only (RUO) and is strictly not intended for diagnostic or therapeutic procedures. While BenchChem strives to provide accurate protocols, we make no warranties, express or implied, regarding the fitness of this product for every specific experimental setup.

Technical Support: The protocols provided are for reference purposes. Unsure if this reagent suits your experiment?

Need Industrial/Bulk Grade? Request Custom Synthesis Quote

BenchChem

Our mission is to be the trusted global source of essential and advanced chemicals, empowering scientists and researchers to drive progress in science and industry.

Contact

Address: 3281 E Guasti Rd

Ontario, CA 91761, United States

Phone: (601) 213-4426

Email: info@benchchem.com

© 2026 BenchChem. All rights reserved.

Contact our Ph.D. Support Team for a compatibility check

© 2026 BenchChem. All rights reserved.