Technical Support Center: Optimizing SARS-CoV-2-IN-38 Concentration

Author: BenchChem Technical Support Team. **Date**: April 2026

Compound of Interest

Compound Name:	*SARS-CoV-2-IN-38*
Cat. No.:	*B12380284*

Get Quote

This technical support center provides researchers, scientists, and drug development professionals with essential guidance for optimizing the experimental concentration of **SARS-CoV-2-IN-38** to achieve maximum therapeutic efficacy while minimizing cytotoxicity.

Frequently Asked Questions (FAQs)

Q1: What is the recommended starting concentration for **SARS-CoV-2-IN-38** in in-vitro assays?

A1: For a novel compound like **SARS-CoV-2-IN-38**, it is advisable to start with a broad concentration range in initial screening assays. A common starting point is a 10-point dose-response curve, ranging from 0.1 nM to 100 µM. This wide range helps in identifying the initial potency of the compound and establishing a preliminary half-maximal inhibitory concentration (IC50).

Q2: How do I determine the optimal concentration range for my specific cell line?

A2: The optimal concentration can vary between different cell lines due to variations in metabolism and cellular uptake. It is crucial to perform a cytotoxicity assay, such as an MTT or LDH assay, on the specific cell line you will be using for your antiviral experiments. This will help you determine the 50% cytotoxic concentration (CC50). The optimal therapeutic window

© 2026 BenchChem. All rights reserved.

lies between the IC50 and the CC50, maximizing antiviral activity while minimizing harm to the host cells.

Q3: What are the critical controls to include in my experiments?

A3: To ensure the validity of your results, several controls are essential:

- Vehicle Control: Cells treated with the same concentration of the solvent (e.g., DMSO) used to dissolve **SARS-CoV-2-IN-38**. This accounts for any effects of the solvent itself.
- Positive Control: A known SARS-CoV-2 inhibitor (e.g., Remdesivir) to confirm that the assay is working correctly.
- Negative Control (Mock-infected): Cells that are not infected with the virus but are otherwise treated the same as the experimental groups. This helps to assess the baseline health of the cells.
- Untreated Control: Infected cells that do not receive any treatment. This serves as a baseline for maximal viral replication.

Troubleshooting Guides

© 2026 BenchChem. All rights reserved.

Issue	Possible Cause(s)	Recommended Solution(s)
Unexpectedly Low Viral Inhibition	1. Compound Degradation: SARS-CoV-2-IN-38 may be unstable under experimental conditions (e.g., temperature, light exposure).2. Incorrect Concentration: Errors in serial dilutions or initial stock concentration calculations.3. Low Cell Permeability: The compound may not be efficiently entering the host cells.4. Assay Interference: The compound may interfere with the readout of the antiviral assay (e.g., luciferase, fluorescence).	1. Check the stability of the compound under your experimental conditions. Prepare fresh solutions for each experiment.2. Verify the concentration of your stock solution and the accuracy of your serial dilutions.3. Consider using a different cell line or performing a cellular uptake assay.4. Run a counterscreen to check for assay interference.
High Cytotoxicity Observed	1. Compound is Inherently Toxic: SARS-CoV-2-IN-38 may have off-target effects that lead to cell death.2. Solvent Toxicity: High concentrations of the vehicle (e.g., DMSO > 0.5%) can be toxic to cells.3. Extended Incubation Time: Prolonged exposure to the compound may increase cytotoxicity.	1. Determine the CC50 and select concentrations for antiviral assays that are well below this value.2. Ensure the final concentration of the vehicle in your culture medium is non-toxic.3. Optimize the incubation time to be sufficient for antiviral activity but short enough to minimize cytotoxicity.

© 2026 BenchChem. All rights reserved.

Inconsistent Results Between Experiments	1. Variability in Viral Titer: The amount of virus used for infection may differ between experiments.2. Cell Passage Number: High passage numbers can lead to changes in cell physiology and susceptibility to viral infection.3. Inconsistent Pipetting or Technique: Minor variations in experimental procedure can lead to significant differences in results.	1. Aliquot and titer your viral stocks to ensure consistent multiplicity of infection (MOI) for each experiment.2. Use cells with a consistent and low passage number.3. Ensure proper mixing of reagents and use calibrated pipettes.

Experimental Protocols

Cell Viability Assay (MTT Assay)

This protocol is for determining the cytotoxicity of **SARS-CoV-2-IN-38**.

- Cell Seeding: Seed cells in a 96-well plate at a density of 1 x 10^4 cells/well and incubate for 24 hours at 37°C, 5% CO2.
- Compound Addition: Prepare serial dilutions of **SARS-CoV-2-IN-38** in culture medium. Remove the old medium from the cells and add 100 µL of the compound dilutions to the respective wells. Include vehicle-only controls.
- Incubation: Incubate the plate for 48-72 hours (this should match the duration of your planned antiviral assay).
- MTT Addition: Add 10 µL of 5 mg/mL MTT solution to each well and incubate for 4 hours at 37°C.
- Formazan Solubilization: Remove the medium and add 100 µL of DMSO to each well to dissolve the formazan crystals.

© 2026 BenchChem. All rights reserved.

- Absorbance Reading: Measure the absorbance at 570 nm using a microplate reader.
- Data Analysis: Calculate the percentage of cell viability relative to the vehicle control and determine the CC50 value.

Viral Titer Assay (Plaque Assay)

This protocol is for quantifying the amount of infectious virus.

- Cell Seeding: Seed Vero E6 cells (or another susceptible cell line) in a 6-well plate and grow to 90-100% confluency.
- Viral Infection: Prepare 10-fold serial dilutions of the virus-containing supernatant. Infect the cells with 200 µL of each dilution for 1 hour at 37°C, with gentle rocking every 15 minutes.
- Overlay: Remove the inoculum and overlay the cells with 2 mL of a 1:1 mixture of 2X DMEM and 1.2% agarose.
- Incubation: Incubate the plates at 37°C, 5% CO2 for 2-3 days until plaques are visible.
- Staining: Fix the cells with 4% formaldehyde and stain with 0.1% crystal violet.
- Plaque Counting: Count the number of plaques and calculate the viral titer in plaque-forming units per mL (PFU/mL).

Visualizations

© 2026 BenchChem. All rights reserved.

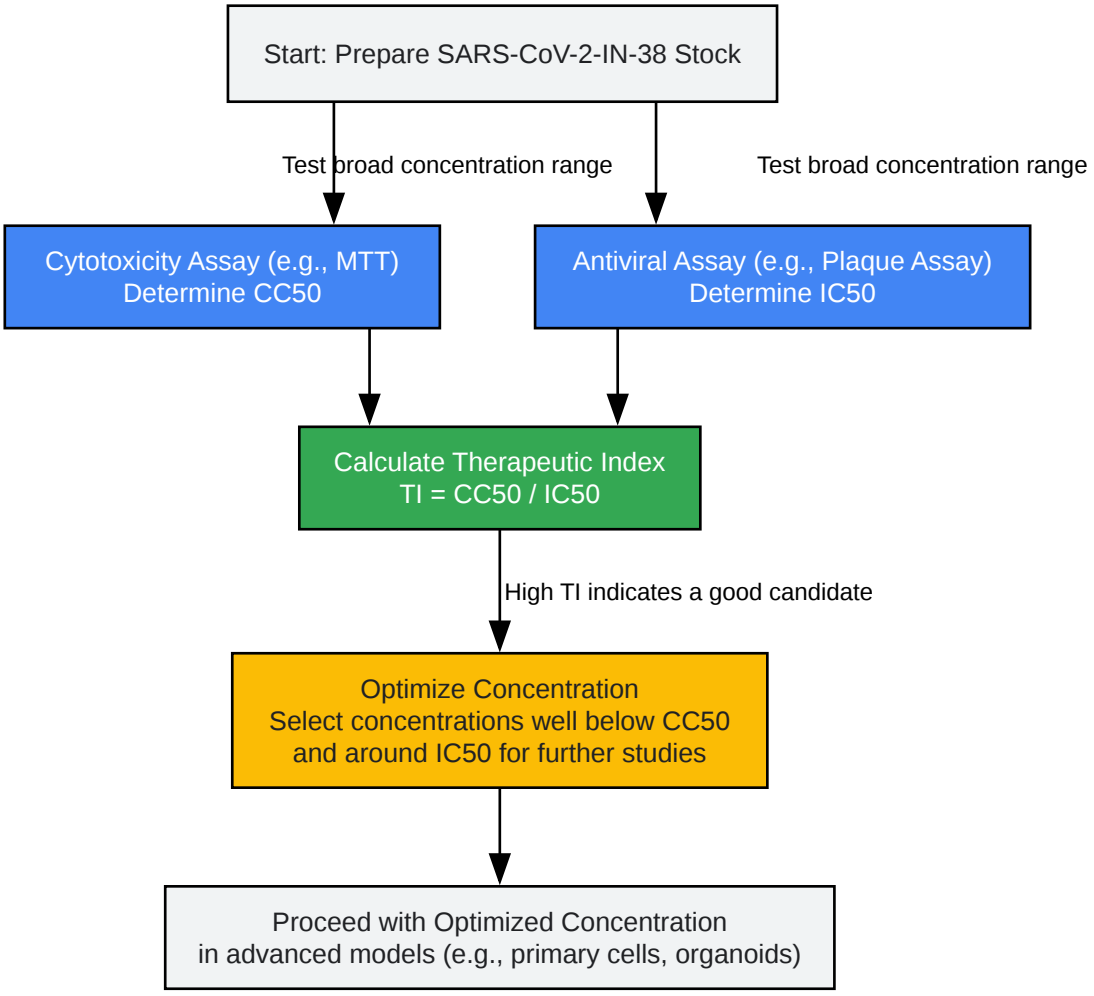

Click to download full resolution via product page

Caption: Workflow for determining the optimal concentration of **SARS-CoV-2-IN-38**.

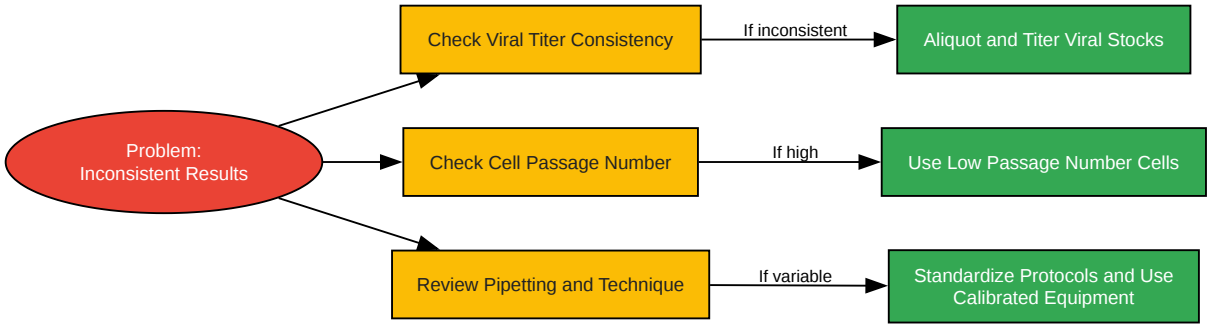

Click to download full resolution via product page

© 2026 BenchChem. All rights reserved.

Caption: Troubleshooting logic for inconsistent experimental results.

- To cite this document: BenchChem. [Technical Support Center: Optimizing SARS-CoV-2-IN-38 Concentration]. BenchChem, [2026]. [Online PDF]. Available at: [https://www.benchchem.com/product/b12380284/docs#technical-support-center-optimizing-sars-cov-2-in-38-concentration]

Disclaimer & Data Validity:

The information provided in this document is for Research Use Only (RUO) and is strictly not intended for diagnostic or therapeutic procedures. While BenchChem strives to provide accurate protocols, we make no warranties, express or implied, regarding the fitness of this product for every specific experimental setup.

Technical Support: The protocols provided are for reference purposes. Unsure if this reagent suits your experiment?

Need Industrial/Bulk Grade? Request Custom Synthesis Quote

BenchChem

Our mission is to be the trusted global source of essential and advanced chemicals, empowering scientists and researchers to drive progress in science and industry.

Contact

Address: 3281 E Guasti Rd

Ontario, CA 91761, United States

Phone: (601) 213-4426

Email: info@benchchem.com

Contact our Ph.D. Support Team for a compatibility check