Technical Support Center: Troubleshooting Cell-Based Assays with MS8709

Author: BenchChem Technical Support Team. **Date**: April 2026

Compound of Interest

Compound Name:	*MS8709*
Cat. No.:	*B12372392*

Get Quote

This technical support center provides guidance for researchers, scientists, and drug development professionals encountering inconsistent results in cell-based assays involving the G9a/GLP PROTAC degrader, **MS8709**. The following troubleshooting guides and frequently asked questions (FAQs) address common issues to help ensure the reliability and reproducibility of your experiments.

Frequently Asked Questions (FAQs)

Q1: What is **MS8709** and how does it work?

MS8709 is a first-in-class proteolysis targeting chimera (PROTAC) degrader specifically designed to target the lysine methyltransferases G9a (also known as EHMT2) and G9a-like protein (GLP, or EHMT1).[1][2][3] It functions by linking the G9a/GLP proteins to the von Hippel-Lindau (VHL) E3 ubiquitin ligase.[1][3][4] This proximity induces the ubiquitination and subsequent degradation of G9a and GLP by the proteasome.[1][2][4] This degradation-based mechanism allows for the elimination of both the catalytic and non-catalytic functions of G9a/GLP.[1][4]

Q2: In which cell lines has **MS8709** been shown to be effective?

© 2026 BenchChem. All rights reserved.

MS8709 has demonstrated potent degradation of G9a/GLP and superior cell growth inhibition in various cancer cell lines, including:

- Prostate cancer (22Rv1)[1][4]
- Leukemia (K562)[1][4]
- Non-small cell lung cancer (H1299)[1][5]

Q3: What are the expected outcomes of successful **MS8709** treatment in a responsive cell line?

A successful experiment with **MS8709** should result in a time- and concentration-dependent degradation of G9a and GLP proteins.[1][2] This degradation should lead to a reduction in the levels of H3K9me2, a downstream marker of G9a/GLP activity, and ultimately inhibit cell proliferation.[4]

Troubleshooting Guide for Inconsistent Results

Issue 1: High Variability in G9a/GLP Degradation Levels

Possible Causes & Solutions

© 2026 BenchChem. All rights reserved.

Possible Cause	Troubleshooting Steps
Cell Health and Confluency: Inconsistent cell health or confluency at the time of treatment can significantly impact results.	- Ensure cells are in the logarithmic growth phase and at a consistent confluency (e.g., 70-80%) before treatment. - Regularly check for signs of stress or contamination. - Perform routine cell line authentication.
Inconsistent MS8709 Concentration: Errors in serial dilutions or improper storage of MS8709 can lead to variable effective concentrations.	- Prepare fresh serial dilutions of MS8709 for each experiment from a validated stock solution. - Aliquot stock solutions to avoid repeated freeze-thaw cycles. - Follow the manufacturer's recommendations for storage.
Variable Incubation Times: Inconsistent exposure times to MS8709 will lead to varied levels of protein degradation.	- Use a calibrated timer and standardize the incubation period across all plates and experiments. Degradation has been observed as early as 4 hours, with complete degradation around 24 hours.[1][5]
Issues with Lysis Buffer or Protease Inhibitors: Inefficient cell lysis or protein degradation after lysis can affect the accuracy of Western blot results.	- Use a validated lysis buffer and ensure the addition of a fresh protease inhibitor cocktail immediately before use.

Issue 2: Inconsistent Cell Viability/Growth Inhibition Results

Possible Causes & Solutions

© 2026 BenchChem. All rights reserved.

Possible Cause	Troubleshooting Steps
Inaccurate Cell Seeding: Uneven cell numbers across wells is a common source of variability in viability assays.	- Ensure thorough cell suspension mixing before seeding. - Use a calibrated multichannel pipette for seeding. - Allow plates to sit at room temperature for a short period before incubation to ensure even cell settling.
Edge Effects in Multi-well Plates: Wells on the perimeter of the plate can be prone to evaporation, leading to altered cell growth.	- Avoid using the outer wells of the plate for experimental conditions. Fill them with sterile media or PBS to maintain humidity.
Reagent and Assay Variability: Differences in reagent preparation or incubation times for viability assays (e.g., MTT, CellTiter-Glo) can cause inconsistencies.	- Prepare a master mix of the viability reagent for all wells. - Ensure consistent incubation times for the viability assay across all plates.
Cell Line Specific Response: The anti-proliferative effects of MS8709 can vary between cell lines.	- Confirm the expected sensitivity of your cell line to G9a/GLP degradation.

Quantitative Data Summary

The following tables summarize key quantitative data for **MS8709** from published studies.

Table 1: Half-maximal Degradation Concentration (DC50) in 22Rv1 Prostate Cancer Cells

Target Protein	DC50 (nM)
G9a	274
GLP	260

Data from Network of Cancer Research.[4]

Table 2: Half-maximal Growth Inhibition (GI50) in Various Cancer Cell Lines

© 2026 BenchChem. All rights reserved.

Cell Line	Cancer Type	GI50 (μM)
22Rv1	Prostate Cancer	4.1
K562	Leukemia	2.0
H1299	Non-Small Cell Lung Cancer	5.0

Data from Network of Cancer Research.[4]

Experimental Protocols

Western Blotting for G9a/GLP Degradation

- Cell Seeding and Treatment: Seed cells (e.g., 22Rv1) in 6-well plates and allow them to adhere overnight. Treat with varying concentrations of **MS8709** (e.g., 0, 0.3, 1, 3 μM) for a specified time (e.g., 24 hours).
- Cell Lysis: Wash cells with ice-cold PBS and lyse with RIPA buffer supplemented with a protease inhibitor cocktail.
- Protein Quantification: Determine protein concentration using a BCA assay.
- SDS-PAGE and Transfer: Load equal amounts of protein onto an SDS-PAGE gel, run the gel, and transfer the proteins to a PVDF membrane.
- Immunoblotting: Block the membrane and probe with primary antibodies against G9a, GLP, H3K9me2, and a loading control (e.g., β-actin or GAPDH). Follow with an appropriate HRP-conjugated secondary antibody.
- Detection: Visualize protein bands using an enhanced chemiluminescence (ECL) substrate and an imaging system.

Cell Growth Inhibition Assay

- Cell Seeding: Seed cells in a 96-well plate at a predetermined optimal density.
- Treatment: After 24 hours, treat the cells with a serial dilution of **MS8709**.

© 2026 BenchChem. All rights reserved.

- Incubation: Incubate the cells for an extended period (e.g., 7 days).
- Viability Measurement: Assess cell viability using a suitable assay, such as CellTiter-Glo® Luminescent Cell Viability Assay, following the manufacturer's instructions.
- Data Analysis: Normalize the results to vehicle-treated controls and calculate the GI50 values using appropriate software.

Visualizations

MS8709 Mechanism of Action

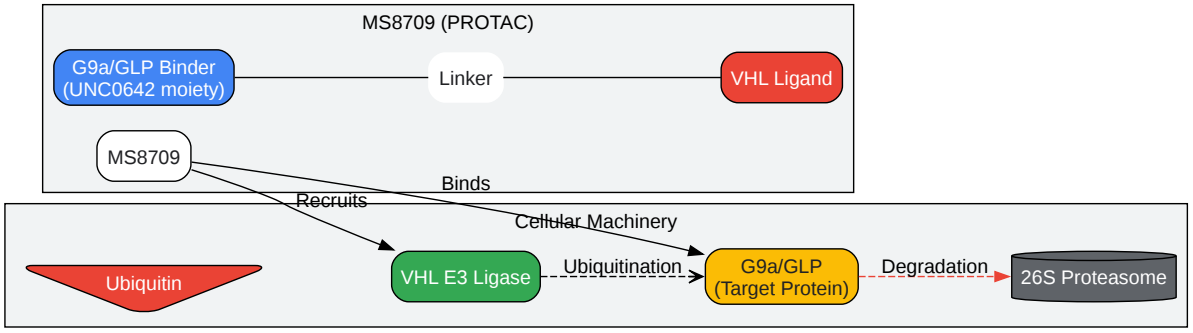

Click to download full resolution via product page

Caption: Mechanism of **MS8709**-induced G9a/GLP degradation.

Troubleshooting Logic Flow for Inconsistent Degradation

© 2026 BenchChem. All rights reserved.

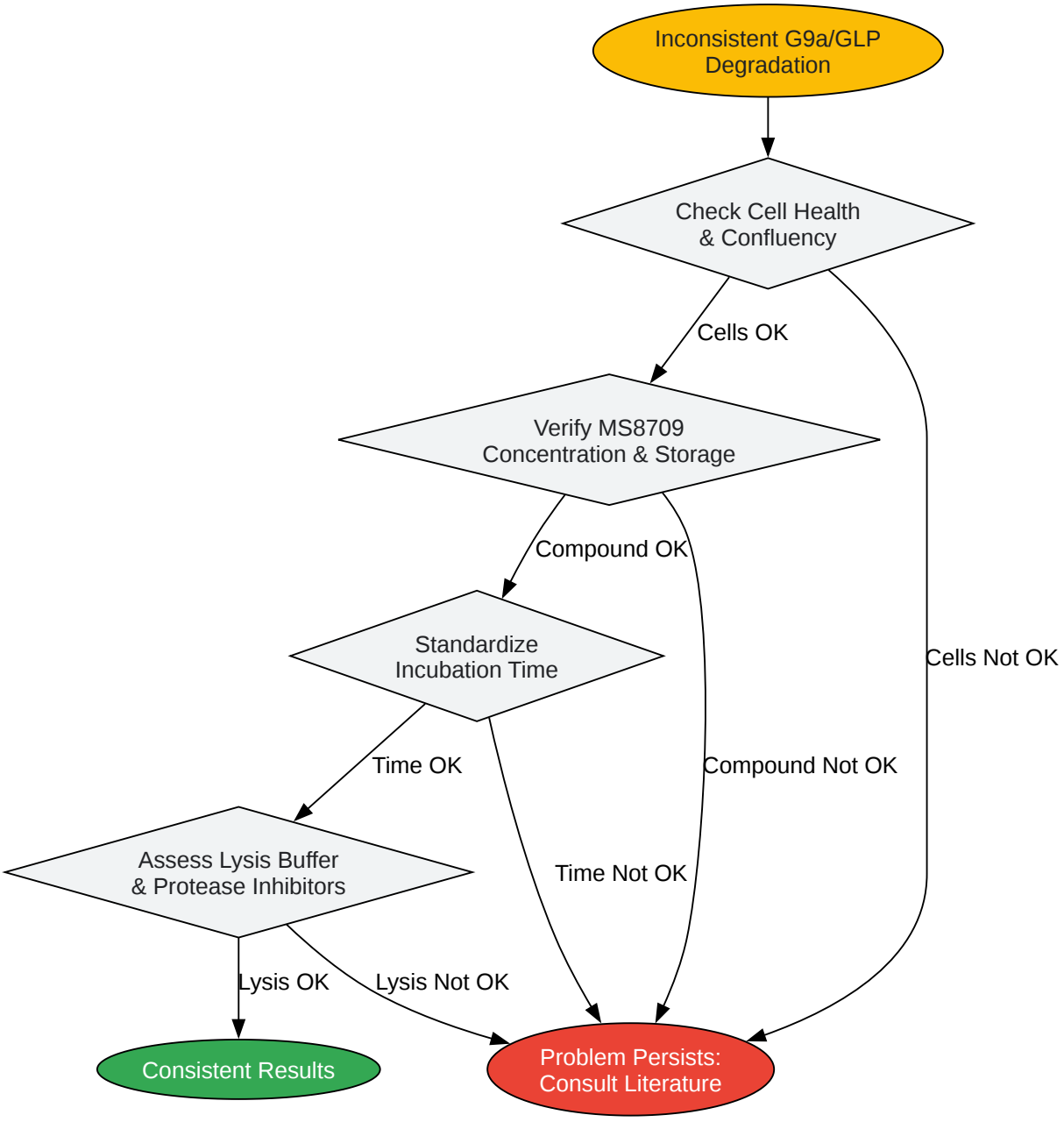

Click to download full resolution via product page

Caption: Troubleshooting workflow for variable degradation results.

© 2026 BenchChem. All rights reserved.

G9a/GLP Signaling Pathway

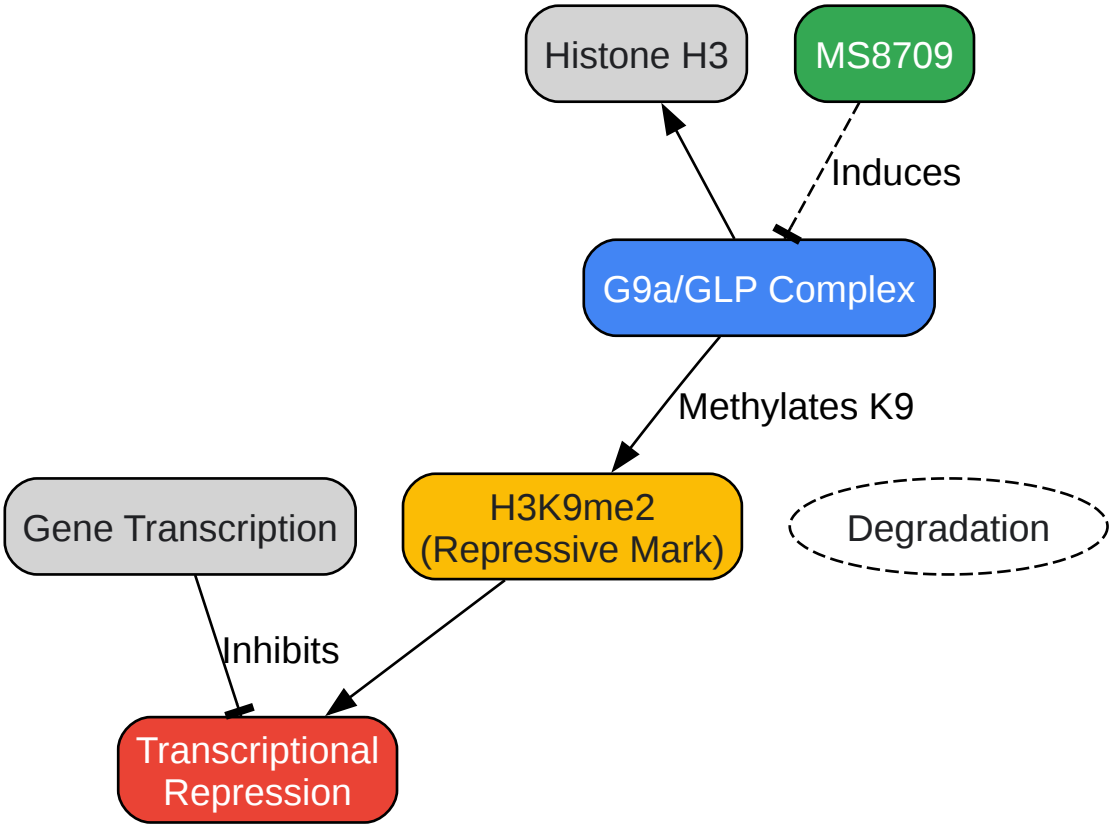

Click to download full resolution via product page

Caption: Simplified G9a/GLP signaling and **MS8709** intervention.

Need Custom Synthesis?

BenchChem offers custom synthesis for rare earth carbides and specific isotopiclabeling.

Email: info@benchchem.com or Request Quote Online.

References

- 1. Discovery of the First-in-Class G9a/GLP PROTAC Degrader - PMC [pmc.ncbi.nlm.nih.gov]
- 2. Discovery of the First-in-class G9a/GLP PROTAC Degrader - PMC [pmc.ncbi.nlm.nih.gov]
- 3. medchemexpress.com [medchemexpress.com]
- 4. cancer-research-network.com [cancer-research-network.com]

© 2026 BenchChem. All rights reserved.

- 5. biorxiv.org [biorxiv.org]
- To cite this document: BenchChem. [Technical Support Center: Troubleshooting Cell-Based Assays with MS8709]. BenchChem, [2026]. [Online PDF]. Available at: [https://www.benchchem.com/product/b12372392/docs#technical-support-center-troubleshooting-cell-based-assays-with-ms8709]

Disclaimer & Data Validity:

The information provided in this document is for Research Use Only (RUO) and is strictly not intended for diagnostic or therapeutic procedures. While BenchChem strives to provide accurate protocols, we make no warranties, express or implied, regarding the fitness of this product for every specific experimental setup.

Technical Support: The protocols provided are for reference purposes. Unsure if this reagent suits your experiment?

Need Industrial/Bulk Grade? Request Custom Synthesis Quote

BenchChem

Our mission is to be the trusted global source of essential and advanced chemicals, empowering scientists and researchers to drive progress in science and industry.

Contact

Address: 3281 E Guasti Rd

Ontario, CA 91761, United States

Phone: (601) 213-4426

Email: info@benchchem.com

Contact our Ph.D. Support Team for a compatibility check

© 2026 BenchChem. All rights reserved.