Navigating Unexpected Results with Flt3-IN-24: A Technical Support Guide

Author: BenchChem Technical Support Team. **Date**: April 2026

Compound of Interest

Compound Name: *Flt3-IN-24*

Cat. No.: *B12372492*

Get Quote

This technical support center provides troubleshooting guides and frequently asked questions (FAQs) to help researchers, scientists, and drug development professionals interpret unexpected results when working with the FMS-like tyrosine kinase 3 (FLT3) inhibitor, **Flt3-IN-24**. While specific experimental data for **Flt3-IN-24** is not publicly available, this guide leverages established knowledge of Flt3 inhibitors to address common challenges.

Frequently Asked Questions (FAQs)

Q1: What is the mechanism of action for Flt3 inhibitors?

Flt3 inhibitors are small molecule drugs that target the FMS-like tyrosine kinase 3 (FLT3), a receptor tyrosine kinase.[1][2][3][4][5] Mutations in the FLT3 gene can lead to constitutive activation of the receptor, promoting uncontrolled growth of abnormal blood cells, particularly in acute myeloid leukemia (AML).[1][3][4][6] Flt3 inhibitors bind to the FLT3 receptor, preventing its activation and the subsequent downstream signaling that drives cancer cell proliferation.[3] They are a form of targeted therapy for cancers with FLT3 mutations.[3]

Q2: What are the different types of Flt3 inhibitors?

© 2026 BenchChem. All rights reserved.

Flt3 inhibitors are broadly classified into two generations based on their specificity and as Type I or Type II based on their binding mechanism.[1][7][8]

- First-generation inhibitors (e.g., midostaurin, sorafenib) are multi-kinase inhibitors with off-target effects.[1][8]
- Second-generation inhibitors (e.g., gilteritinib, quizartinib) are more potent and selective for FLT3.[1][9]
- Type I inhibitors bind to the active conformation of the FLT3 kinase domain.[7]
- Type II inhibitors bind to the inactive conformation of the kinase domain.[7]

Q3: My cells are showing resistance to **Flt3-IN-24**. What are the possible reasons?

Resistance to Flt3 inhibitors can be primary (innate) or secondary (acquired) and can occur through on-target or off-target mechanisms.[7][10][11][12]

- On-target resistance often involves secondary mutations in the FLT3 gene itself, which can interfere with inhibitor binding.[7][11]
- Off-target resistance involves the activation of alternative signaling pathways that bypass the need for Flt3 signaling. Common bypass pathways include the RAS/MAPK, PI3K/Akt, and JAK/STAT pathways.[10][11][12][13] The bone marrow microenvironment can also contribute to resistance by providing survival signals to cancer cells.[10][11]

Q4: I am observing unexpected off-target effects. What could be causing this?

While second-generation Flt3 inhibitors are more selective, off-target effects can still occur, particularly with first-generation, multi-kinase inhibitors.[1][8] These effects arise from the inhibitor binding to and affecting the function of other kinases besides FLT3. To investigate potential off-target effects, consider performing a kinome profiling assay to identify other kinases inhibited by **Flt3-IN-24** at the concentrations used in your experiments.

Troubleshooting Guides

© 2026 BenchChem. All rights reserved.

Problem 1: Reduced or No Inhibition of Flt3 Phosphorylation

Possible Causes & Solutions

Possible Cause	Suggested Solution
Incorrect inhibitor concentration	Perform a dose-response experiment to determine the optimal IC50 of Flt3-IN-24 in your specific cell line. Start with a broad range of concentrations (e.g., 1 nM to 10 µM).
Inhibitor degradation	Ensure proper storage of Flt3-IN-24 (typically at -20°C or -80°C). Prepare fresh stock solutions and dilute to the final working concentration immediately before use. Avoid repeated freeze-thaw cycles.
Cell line authenticity and passage number	Verify the identity of your cell line using short tandem repeat (STR) profiling. Use cells at a low passage number, as high passage numbers can lead to genetic drift and altered signaling.
Presence of Flt3 mutations conferring resistance	Sequence the FLT3 gene in your cells to check for known resistance mutations, particularly in the tyrosine kinase domain (TKD).[7][11]
High protein binding in media	Flt3 inhibitors can bind to plasma proteins, reducing their effective concentration.[7] If using serum-containing media, consider this possibility and potentially increase the inhibitor concentration or use serum-free media for short-term experiments.

Problem 2: Unexpected Cell Viability Results

Possible Causes & Solutions

© 2026 BenchChem. All rights reserved.

Possible Cause	Suggested Solution
Off-target toxicity	At high concentrations, Flt3-IN-24 may inhibit other kinases essential for cell survival. Lower the concentration and/or use a more selective Flt3 inhibitor as a control. Perform a kinome scan to identify potential off-targets.
Activation of bypass signaling pathways	Cells may be activating alternative survival pathways (e.g., RAS/MAPK, PI3K/Akt) to circumvent Flt3 inhibition.[10][11][12][13] Analyze the phosphorylation status of key proteins in these pathways (e.g., p-ERK, p-Akt) by Western blot. Consider combination therapy with inhibitors of the activated bypass pathway.
Cell density and confluency	High cell density can lead to nutrient depletion and accumulation of waste products, affecting cell health and response to treatment. Seed cells at a consistent and optimal density for your assays.
Incorrect assay timing	The effects of Flt3-IN-24 on cell viability may be time-dependent. Perform a time-course experiment (e.g., 24, 48, 72 hours) to determine the optimal endpoint.
Apoptosis vs. Senescence	The inhibitor might be inducing senescence rather than apoptosis. Use assays to detect markers of both processes (e.g., caspase-3/7 activity for apoptosis, β-galactosidase staining for senescence).

Experimental Protocols

Key Experiment: Western Blot for Flt3 Signaling

This protocol outlines the steps to assess the inhibition of Flt3 phosphorylation and the status of downstream signaling pathways.

© 2026 BenchChem. All rights reserved.

- Cell Seeding and Treatment:
  - Seed Flt3-mutant cells (e.g., MV4-11, MOLM-13) in 6-well plates at a density of 0.5 x 10^6 cells/mL.
  - Allow cells to adhere and grow for 24 hours.
  - Treat cells with a range of **Flt3-IN-24** concentrations (e.g., 0, 1, 10, 100, 1000 nM) for a predetermined time (e.g., 2-4 hours for signaling inhibition).
- Cell Lysis:
  - Pellet the cells by centrifugation.
  - Wash the cell pellet with ice-cold PBS.
  - Lyse the cells in RIPA buffer supplemented with protease and phosphatase inhibitors.
  - Incubate on ice for 30 minutes with vortexing every 10 minutes.
  - Clarify the lysate by centrifugation at 14,000 rpm for 15 minutes at 4°C.
- Protein Quantification:
  - Determine the protein concentration of the supernatant using a BCA protein assay.
- SDS-PAGE and Western Blotting:
  - Normalize protein amounts and prepare samples with Laemmli buffer.
  - Separate proteins on a 4-12% Bis-Tris polyacrylamide gel.
  - Transfer proteins to a PVDF membrane.
  - Block the membrane with 5% non-fat dry milk or BSA in TBST for 1 hour at room temperature.
  - Incubate the membrane with primary antibodies overnight at 4°C. Recommended primary antibodies include:

© 2026 BenchChem. All rights reserved.

- p-Flt3 (Tyr591)
- Total Flt3
- p-STAT5 (Tyr694)
- Total STAT5
- p-Akt (Ser473)
- Total Akt
- p-ERK1/2 (Thr202/Tyr204)
- Total ERK1/2
- GAPDH or β-actin (as a loading control)

- Wash the membrane three times with TBST.
- Incubate with HRP-conjugated secondary antibodies for 1 hour at room temperature.
- Wash the membrane three times with TBST.
- Develop the blot using an ECL substrate and image using a chemiluminescence detection system.

Visualizations

Flt3 Signaling Pathway

© 2026 BenchChem. All rights reserved.

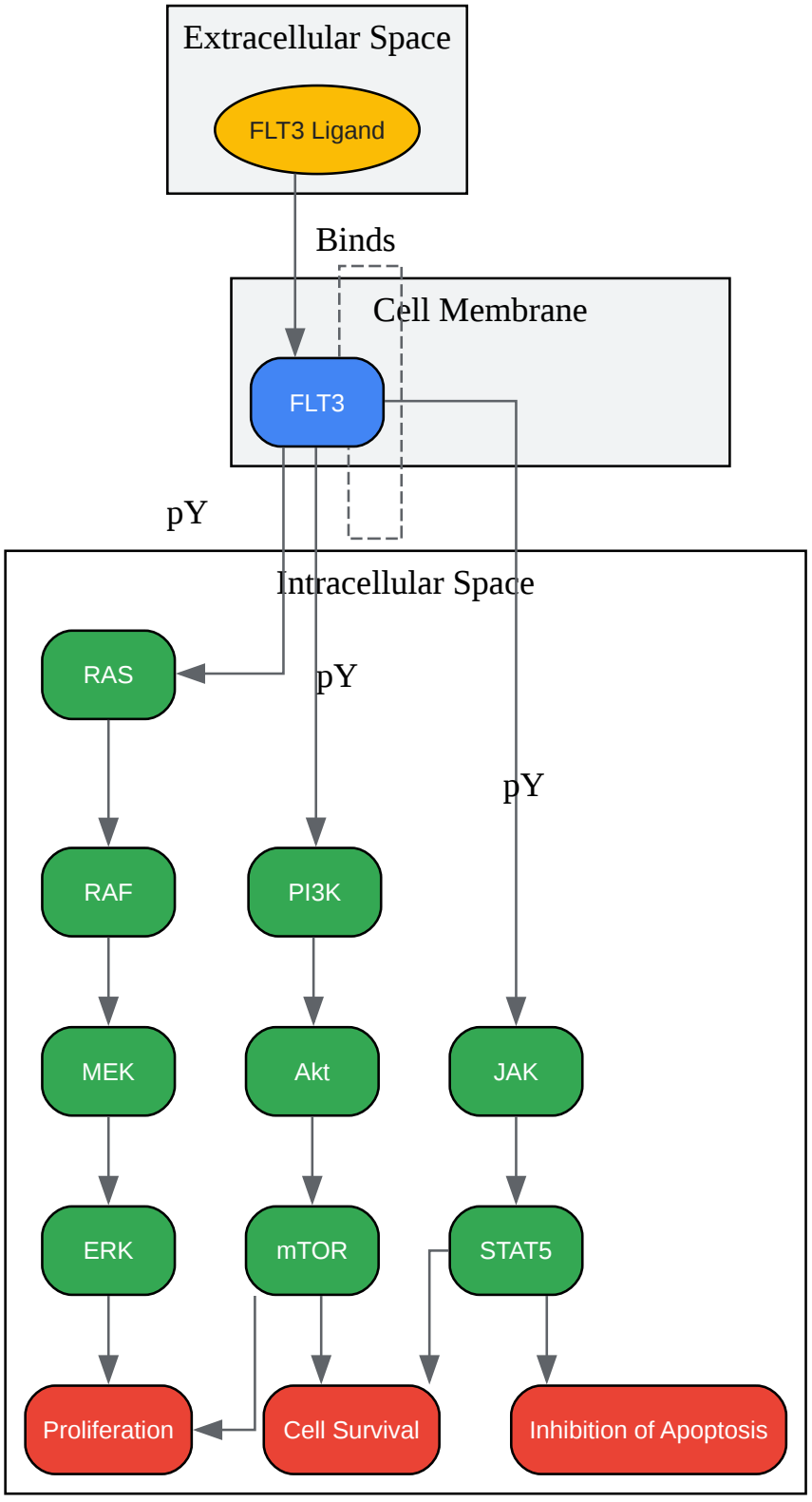

Click to download full resolution via product page

Caption: Canonical Flt3 signaling pathways activated upon ligand binding.

© 2026 BenchChem. All rights reserved.

Troubleshooting Logic for Reduced **Flt3-IN-24** Efficacy

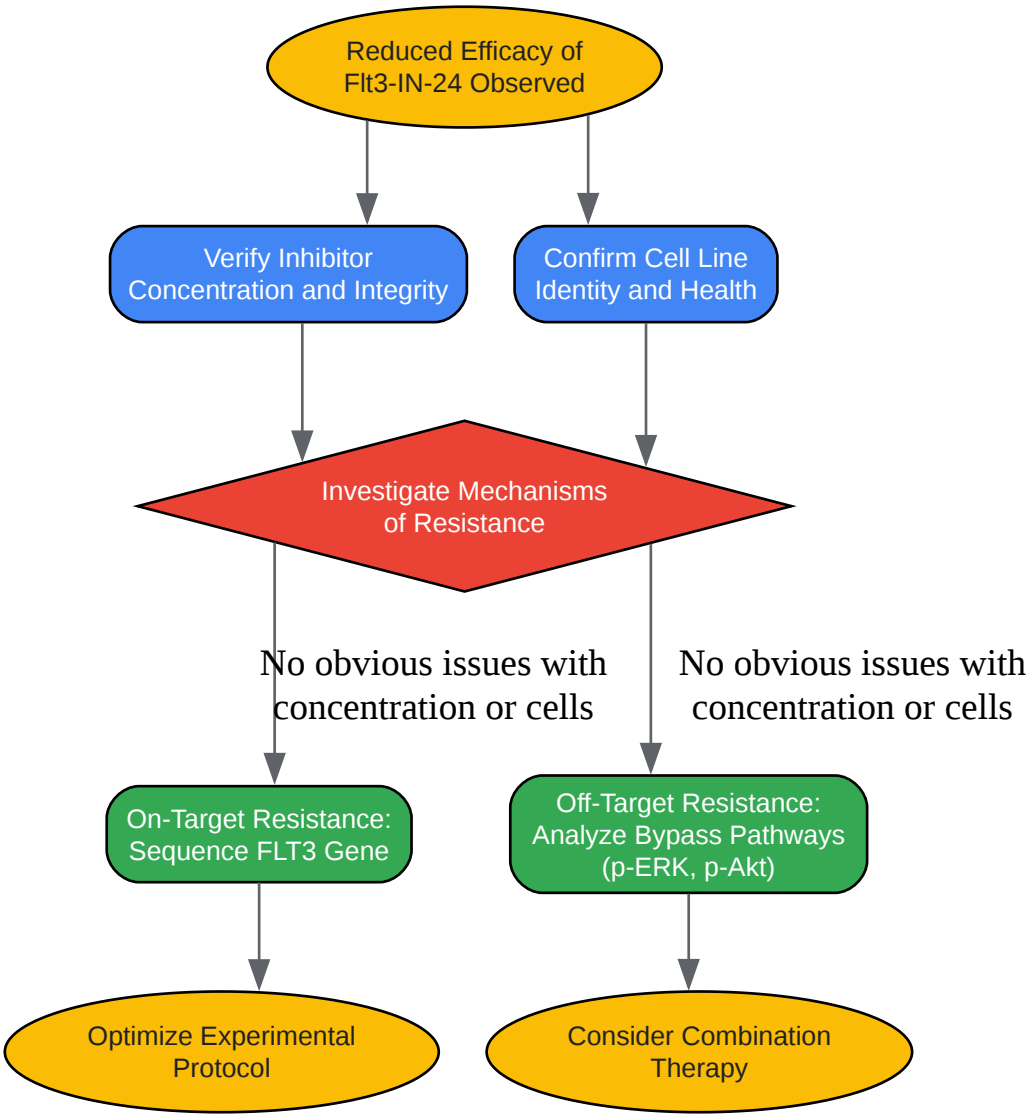

Click to download full resolution via product page

Caption: A logical workflow for troubleshooting decreased **Flt3-IN-24** activity.

Experimental Workflow for Cell Viability Assay

© 2026 BenchChem. All rights reserved.

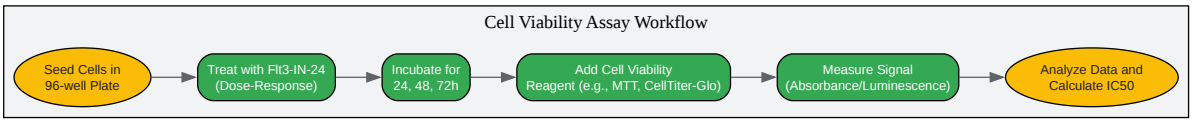

Click to download full resolution via product page

Caption: A standard workflow for assessing cell viability after **Flt3-IN-24** treatment.

Need Custom Synthesis?

BenchChem offers custom synthesis for rare earth carbides and specific isotopiclabeling.

Email: info@benchchem.com or Request Quote Online.

References

- 1. “FLipping” the Story: FLT3-Mutated Acute Myeloid Leukemia and the Evolving Role of FLT3 Inhibitors - PMC [pmc.ncbi.nlm.nih.gov]
- 2. FLT3 INHIBITORS: RECENT ADVANCES AND PROBLEMS FOR CLINICAL APPLICATION - PMC [pmc.ncbi.nlm.nih.gov]
- 3. researchgate.net [researchgate.net]
- 4. ashpublications.org [ashpublications.org]
- 5. FLT3 inhibitors in acute myeloid leukemia: Current status and future directions - PMC [pmc.ncbi.nlm.nih.gov]
- 6. m.youtube.com [m.youtube.com]
- 7. FLT3 mutations in acute myeloid leukemia: Therapeutic paradigm beyond inhibitor development - PMC [pmc.ncbi.nlm.nih.gov]
- 8. Targeting FLT3 Mutation in Acute Myeloid Leukemia: Current Strategies and Future Directions - PMC [pmc.ncbi.nlm.nih.gov]
- 9. Real-Life Management of FLT3-Mutated AML: Single-Centre Experience over 24 Years - PMC [pmc.ncbi.nlm.nih.gov]

© 2026 BenchChem. All rights reserved.

- 10. FLT3 Inhibition and Mechanisms of Drug Resistance in mutant FLT3-Positive AML - PMC [pmc.ncbi.nlm.nih.gov]
- 11. Mechanisms of resistance to FLT3 inhibitors and the role of the bone marrow microenvironment - PMC [pmc.ncbi.nlm.nih.gov]
- 12. mdpi.com [mdpi.com]
- 13. Downstream molecular pathways of FLT3 in the pathogenesis of acute myeloid leukemia: biology and therapeutic implications - PMC [pmc.ncbi.nlm.nih.gov]
- To cite this document: BenchChem. [Navigating Unexpected Results with Flt3-IN-24: A Technical Support Guide]. BenchChem, [2026]. [Online PDF]. Available at: [https://www.benchchem.com/product/b12372492/docs#navigating-unexpected-results-with-flt3-in-24-a-technical-support-guide]

Disclaimer & Data Validity:

The information provided in this document is for Research Use Only (RUO) and is strictly not intended for diagnostic or therapeutic procedures. While BenchChem strives to provide accurate protocols, we make no warranties, express or implied, regarding the fitness of this product for every specific experimental setup.

Technical Support: The protocols provided are for reference purposes. Unsure if this reagent suits your experiment?

Need Industrial/Bulk Grade? Request Custom Synthesis Quote

BenchChem

Our mission is to be the trusted global source of essential and advanced chemicals, empowering scientists and researchers to drive progress in science and industry.

Contact

Address: 3281 E Guasti Rd

Ontario, CA 91761, United States

Phone: (601) 213-4426

Email: info@benchchem.com

© 2026 BenchChem. All rights reserved.

Contact our Ph.D. Support Team for a compatibility check

© 2026 BenchChem. All rights reserved.