Comparative Technical Guide: 2-Hydroxy vs. 3-Hydroxypentadecanoic Acid

Author: BenchChem Technical Support Team. **Date**: February 2026

Compound of Interest		
Compound Name:	*2-Hydroxypentadecanoic acid*	
CAS No.:	*2507-54-2*	
Cat. No.:	*B1237189*	*Get Quote*

Executive Summary

While sharing an identical molecular formula (

) and chain length, **2-hydroxypentadecanoic acid** (

-hydroxy) and 3-hydroxypentadecanoic acid (

-hydroxy) represent fundamentally distinct biological lineages.

- 3-Hydroxypentadecanoic Acid is a canonical bacterial metabolite, serving as a structural anchor in Lipid A (endotoxin) and a monomer in polyhydroxyalkanoates (PHAs). Its presence is a definitive biomarker for Gram-negative bacterial burden and specific surfactant-producing species (Bacillus, Pseudomonas).

- **2-Hydroxypentadecanoic Acid** is primarily associated with eukaryotic stress responses (plant

  -dioxygenases) and mammalian sphingolipid metabolism (via Fatty Acid 2-Hydroxylase, FA2H). It serves as a critical marker for neurodegenerative disorders involving myelin stability.

The ability to analytically differentiate these isomers via GC-MS fragmentation patterns (m/z 103 vs. m/z 90) is a prerequisite for accurate lipidomic profiling in drug discovery.

© 2026 BenchChem. All rights reserved.

Chemical & Structural Analysis

Stereochemistry and Functional Group Positioning

The position of the hydroxyl group dictates the molecule's reactivity and biological role.

Feature	2-Hydroxypentadecanoic Acid **(** **-OH)**	3-Hydroxypentadecanoic Acid **(** **-OH)**
IUPAC Name	2-hydroxypentadecanoic acid	3-hydroxypentadecanoic acid
Position	C2 (Alpha carbon, adjacent to carboxyl)	C3 (Beta carbon)
Chirality	Typically (R) in mammals/plants	Typically (R) in bacterial Lipid A
pKa (approx)	~3.5 (Inductive effect of -OH increases acidity)	~4.5 (Similar to unsubstituted fatty acids)
Reactivity	Prone to -oxidation (decarboxylation)	Prone to -elimination (dehydration)

Structural Visualization

The following diagram contrasts the chemical structure and primary mass spectrometry fragmentation points.

© 2026 BenchChem. All rights reserved.

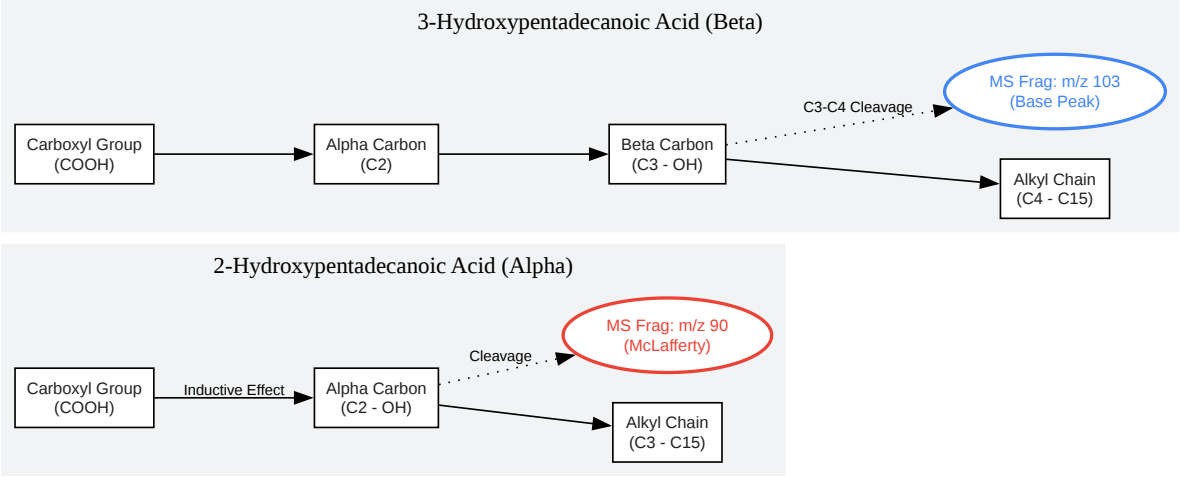

Click to download full resolution via product page

Caption: Structural comparison highlighting the alpha vs. beta hydroxyl positions and their respective diagnostic MS cleavage sites.

Biosynthetic Origins & Metabolic Pathways

Understanding the origin of these lipids allows researchers to pinpoint the biological source (host vs. pathogen) in complex samples.

3-Hydroxypentadecanoic Acid: The Bacterial Signature

This isomer is synthesized via the Type II Fatty Acid Synthesis (FAS II) pathway, exclusive to bacteria and mitochondria.

- Precursor: Odd-chain primers (Propionyl-CoA) derived from amino acids (Valine/Isoleucine) or environmental odd-chain acids.
- Enzymology:

© 2026 BenchChem. All rights reserved.

- FabH/FabF: Condenses Malonyl-ACP with the primer.
- FabG (Ketoacyl-ACP Reductase): Reduces the

  -keto group to a

  -hydroxy group.
- Diverticul: Instead of dehydration (FabZ), the 3-OH-acyl-ACP is intercepted by LpxA/LpxD for Lipid A synthesis or PhaG for polyhydroxyalkanoate (PHA) storage.

- Significance: Accumulation of 3-OH C15:0 suggests the presence of specific Gram-negative bacteria (e.g., Pectinatus, Veillonella) or biosurfactant producers (Bacillus lipopeptides).

2-Hydroxypentadecanoic Acid: The Eukaryotic Stress/Signal

This isomer arises from the modification of pre-existing fatty acids.

- Mammalian Pathway:
  - Enzyme:Fatty Acid 2-Hydroxylase (FA2H).[1][2]
  - Substrate: Pentadecanoyl-CoA (rare, usually C22-C26 are preferred, making C15 a unique marker for specific metabolic states or dietary intake).
  - Location: ER membrane, incorporated into ceramides/cerebrosides.
- Plant/Moss Pathway:
  - Enzyme:

    -Dioxygenase (

    -DOX).[3]
  - Mechanism: Oxygenation of C15:0 to a 2-hydroperoxy intermediate, reduced to 2-hydroxy.
  - Role: Defense signaling against pathogens (wounding response).

© 2026 BenchChem. All rights reserved.

Analytical Differentiation (GC-MS)

This is the most critical section for the laboratory scientist. Standard EI (Electron Ionization) GC-MS of Methyl Ester (FAME) derivatives provides the most robust differentiation.

Derivatization Protocol

Direct analysis of free fatty acids is poor. Two-step derivatization is recommended for hydroxy-fatty acids to improve volatility and fragmentation specificity.

- Methylation:

  /Methanol (

  C, 15 min)

  Forms FAME.

- Silylation (Optional but Recommended): BSTFA + 1% TMCS (

  C, 30 min)

  Forms TMS ether of the hydroxyl group.

Mass Spectral Fingerprints (FAME Derivatives)

© 2026 BenchChem. All rights reserved.

Isomer (Methyl Ester)	Diagnostic Ion (m/z)	Mechanistic Origin
3-OH C15:0	103 (Base Peak)	Cleavage between C3 and C4. Fragment: . This ion is universal for all straight-chain 3-OH FAMEs.
M-18 (254)	Loss of water (dehydration).	
2-OH C15:0	90	McLafferty Rearrangement. Specific to 2-hydroxy methyl esters.
M-59 (213)	Loss of Carbomethoxy group .	
M-18 (254)	Loss of water (less intense than in 3-OH).	

Analytical Workflow Diagram

© 2026 BenchChem. All rights reserved.

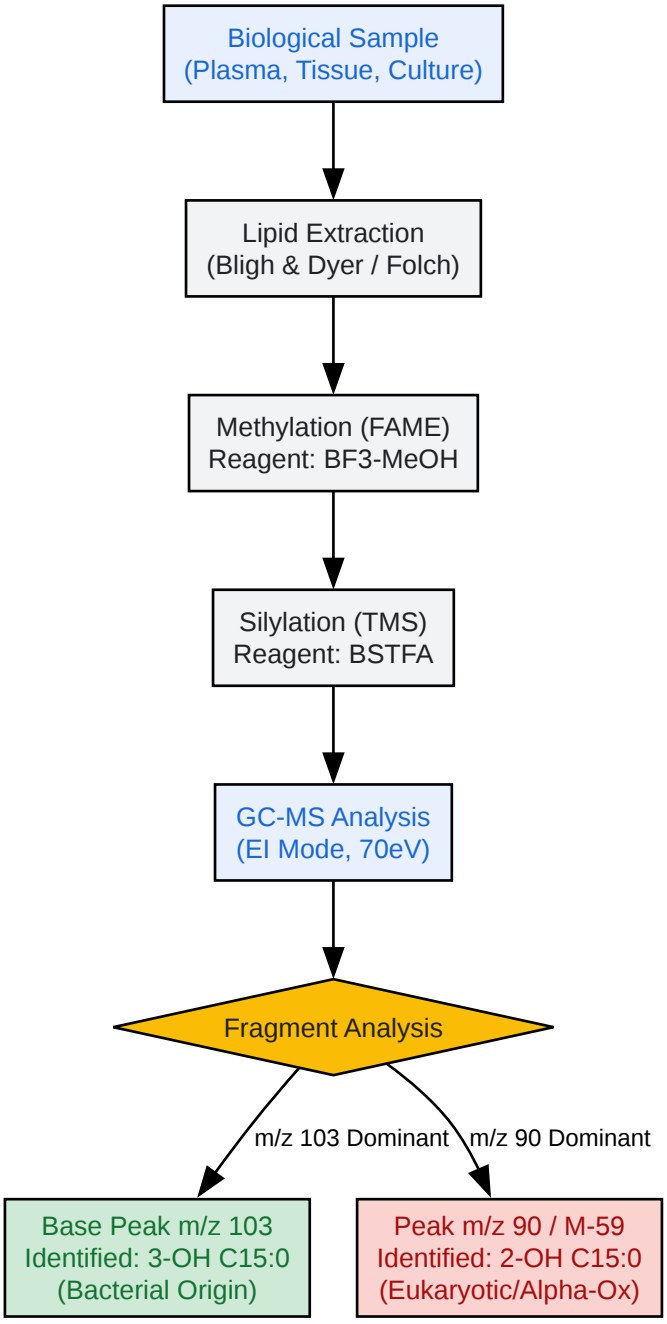

Click to download full resolution via product page

Caption: Step-by-step analytical workflow for distinguishing hydroxy-fatty acid isomers using GC-MS.

Applications in Drug Development & Research

3-OH C15:0 as an Endotoxin Biomarker

© 2026 BenchChem. All rights reserved.

- Context: Drug safety and sepsis research.
- Application: While 3-OH C14:0 is the standard marker for LPS, 3-OH C15:0 is a specific marker for odd-chain producing bacteria (e.g., Pectinatus in brewery spoilage, or specific gut microbiota).
- Drug Target: Inhibitors of LpxC (UDP-3-O-(R-3-hydroxymyristoyl)-N-acetylglucosamine deacetylase) are developed as novel antibiotics. Monitoring the depletion of 3-OH fatty acids in bacterial membranes is a direct pharmacodynamic marker of LpxC inhibition.

2-OH C15:0 in Neurodegenerative Disease

- Context: Sphingolipid metabolism disorders.
- Application: Mutations in the FA2H gene lead to Spastic Paraplegia 35 (SPG35) and Leukodystrophy.
- Mechanism: Loss of 2-hydroxylation destabilizes myelin sheath galactolipids.
- Research Use: 2-OH C15:0 (often used as an internal standard due to its low endogenous abundance compared to C24:0) is critical for quantifying FA2H activity in patient-derived cells.

Adjuvant Development

- Synthetic Lipid A: Synthetic analogs of Lipid A (e.g., GLA, MPL) are used as vaccine adjuvants. The chain length and hydroxylation position (3-OH) are critical for TLR4 receptor agonist activity. Modifying the chain length to C15 (odd chain) modulates the immune potency and toxicity profile.

References

- National Center for Biotechnology Information (2025).PubChem Compound Summary for CID 182089, 3-Hydroxypentadecanoic acid. Retrieved from [Link]
- National Center for Biotechnology Information (2025).PubChem Compound Summary for CID 5282903, **2-Hydroxypentadecanoic acid**. Retrieved from [Link]

© 2026 BenchChem. All rights reserved.

- Jenske, R. & Vetter, W. (2007).Gas Chromatography/Electron-Capture Negative Ion Mass Spectrometry for the Quantitative Determination of 2- and 3-Hydroxy Fatty Acids in Bovine Milk Fat. Journal of Agricultural and Food Chemistry. Retrieved from [Link]
- Hama, H. (2010).Fatty acid 2-Hydroxylation in Mammalian Sphingolipid Biology.[2] Biochimica et Biophysica Acta (BBA) - Molecular and Cell Biology of Lipids. Retrieved from [Link]
- Kaur, A. et al. (2019).Mass spectrum and fragmentation pattern of 3-hydroxy tetradecanoic acid.[4] ResearchGate.[4] Retrieved from [Link][2][4][5]
- Nagano, M. et al. (2012).Arabidopsis Sphingolipid Fatty Acid 2-Hydroxylases (AtFAH1 and AtFAH2) Are Functionally Differentiated. Plant Physiology. Retrieved from [Link]

Need Custom Synthesis?

BenchChem offers custom synthesis for rare earth carbides and specific isotopiclabeling.

Email: info@benchchem.com or Request Quote Online.

Sources

- 1. researchgate.net [researchgate.net]
- 2. Arabidopsis Sphingolipid Fatty Acid 2-Hydroxylases (AtFAH1 and AtFAH2) Are Functionally Differentiated in Fatty Acid 2-Hydroxylation and Stress Responses - PMC [pmc.ncbi.nlm.nih.gov]
- 3. researchgate.net [researchgate.net]
- 4. researchgate.net [researchgate.net]
- 5. researchgate.net [researchgate.net]
- To cite this document: BenchChem. [Comparative Technical Guide: 2-Hydroxy vs. 3-Hydroxypentadecanoic Acid]. BenchChem, [2026]. [Online PDF]. Available at: [https://www.benchchem.com/product/b1237189#difference-between-2-hydroxy-and-3-hydroxypentadecanoic-acid]

Disclaimer & Data Validity:

The information provided in this document is for Research Use Only (RUO) and is strictly not intended for diagnostic or therapeutic procedures. While BenchChem strives to provide accurate protocols, we make no warranties, express or implied, regarding the fitness of this product for every specific experimental setup.

Technical Support: The protocols provided are for reference purposes. Unsure if this reagent suits your experiment? [Contact our Ph.D. Support Team for a compatibility check]

Need Industrial/Bulk Grade? Request Custom Synthesis Quote

BenchChem

Our mission is to be the trusted global source of essential and advanced chemicals, empowering scientists and researchers to drive progress in science and industry.

Contact

Address: 3281 E Guasti Rd

Ontario, CA 91761, United States

Phone: (601) 213-4426

Email: info@benchchem.com

© 2026 BenchChem. All rights reserved.