improving BIO7662 efficacy in cell-based assays

Author: BenchChem Technical Support Team. **Date**: April 2026

Compound of Interest

Compound Name: *BIO7662*

Cat. No.: *B12368099*

Get Quote

Technical Support Center: BIO-7662

Welcome to the technical support center for BIO-7662, a potent and selective allosteric inhibitor of MEK1 and MEK2 kinases. This guide provides troubleshooting advice, frequently asked questions (FAQs), and detailed protocols to help researchers optimize the efficacy of BIO-7662 in cell-based assays.

Understanding the Mechanism of BIO-7662

BIO-7662 targets the Mitogen-Activated Protein Kinase (MAPK) pathway, specifically MEK1 and MEK2.[1][2] This pathway is a critical signaling cascade involved in regulating cell growth, proliferation, and survival.[3] By inhibiting MEK1/2, BIO-7662 prevents the phosphorylation and activation of their only known substrates, the extracellular signal-regulated kinases ERK1 and ERK2.[1][2] This downstream blockade is designed to halt the uncontrolled cell proliferation often seen in cancers with mutations in the RAS/RAF/MEK/ERK pathway.[1][4]

© 2026 BenchChem. All rights reserved.

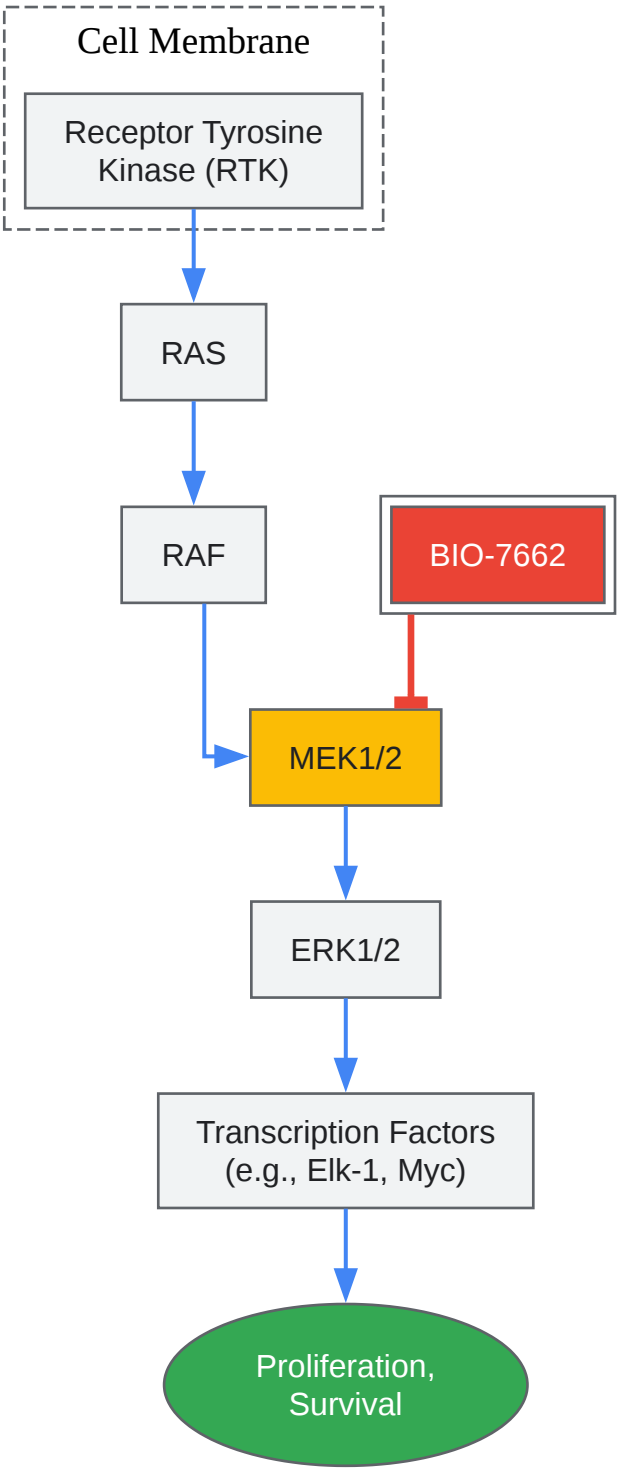

Click to download full resolution via product page

Figure 1: The RAS/RAF/MEK/ERK signaling pathway and the point of inhibition by BIO-7662.

Frequently Asked Questions (FAQs)

© 2026 BenchChem. All rights reserved.

Q1: What is the recommended solvent and storage condition for BIO-7662?

A1: BIO-7662 is typically supplied as a solid. We recommend preparing a stock solution in DMSO (e.g., 10 mM). This stock solution should be aliquoted and stored at -80°C for long-term stability (up to 6 months) or at -20°C for shorter periods (up to 1 month). Avoid repeated freeze-thaw cycles to maintain the compound's potency.[5]

Q2: Which cancer cell lines are most likely to be sensitive to BIO-7662?

A2: Cell lines with activating mutations upstream of MEK in the MAPK pathway, such as BRAF V600E, are often highly sensitive to MEK inhibition.[6] Cell lines with certain KRAS mutations may also show sensitivity, although responses can be more varied.[6] Cells with wild-type RAS and RAF are generally less sensitive. We recommend verifying the mutational status of your cell line and comparing your results with published data for similar genetic backgrounds.[6]

Q3: What is a good starting concentration range for initial cell-based experiments?

A3: For initial dose-response experiments, we recommend a broad concentration range. A common starting range is from 1 nM to 10 µM, typically using a 10-point serial dilution.[5] The optimal concentration will be cell-line dependent. Please refer to the data tables below for more specific guidance.

Q4: Can BIO-7662 be used in combination with other inhibitors?

A4: Yes, combination therapy is a common strategy. Combining MEK inhibitors with inhibitors of other pathways, such as PI3K or CDK4/6, can be effective, particularly in overcoming resistance.[7] For example, combining BIO-7662 with a BRAF inhibitor is a standard approach in BRAF-mutant melanoma.

Troubleshooting Guide

This section addresses specific issues that may arise during your experiments with BIO-7662.

Figure 2: Troubleshooting workflow for low efficacy of BIO-7662 in cell-based assays.

Cell Viability Assays (e.g., MTT, CellTiter-Glo)

Q: I am not seeing a significant decrease in cell viability. What could be wrong?

© 2026 BenchChem. All rights reserved.

A: This is a common issue with several potential causes:

- Cell Line Resistance: Not all cell lines are sensitive to MEK inhibition.[6] Confirm the mutational status of your cell line (e.g., BRAF, KRAS). Consider testing a known sensitive cell line, such as A375 (BRAF V600E), as a positive control.
- Sub-optimal Assay Conditions:
  - Incubation Time: The anti-proliferative effects of MEK inhibitors can be slow. Perform a time-course experiment (e.g., 24, 48, and 72 hours) to find the optimal endpoint.[5]
  - Cell Seeding Density: Ensure cells are in the exponential growth phase throughout the assay. Too high a density can mask the inhibitor's effect. Optimize seeding density for your specific cell line.[5][6]
- Inhibitor Inactivity: Ensure the BIO-7662 stock solution has been stored correctly and that fresh dilutions are prepared for each experiment.[5]
- Serum Interference: Components in fetal bovine serum (FBS) can sometimes bind to inhibitors, reducing their effective concentration. Try performing the assay in a lower serum concentration if possible.

Q: My IC50 values are inconsistent between experiments. Why?

A: Variability in IC50 values often stems from technical inconsistencies:

- Cell Seeding: Ensure a homogenous single-cell suspension before plating to avoid clumps and uneven cell distribution.[5]
- Pipetting Errors: Use calibrated pipettes and be consistent with your technique, especially when performing serial dilutions.
- Edge Effects: Evaporation in the outer wells of a 96-well plate can alter drug concentrations. To minimize this, avoid using the outermost wells for experimental samples and instead fill them with sterile PBS or media.[5]

© 2026 BenchChem. All rights reserved.

- Cell Health: Use cells from a consistent, low passage number, as high passage numbers can lead to genetic drift and altered drug responses.

Target Engagement Assays (Western Blot for p-ERK)

Q: My Western blot shows no decrease in phosphorylated ERK (p-ERK) levels after treatment with BIO-7662.

A: A lack of p-ERK reduction indicates a problem with target engagement.

- Insufficient Dose or Time: The concentration or incubation time may be inadequate. Perform a dose-response (e.g., 10 nM to 5 µM) and a time-course (e.g., 1, 4, 8, 24 hours) experiment to determine the optimal conditions for inhibiting ERK phosphorylation in your cell line.
- Western Blot Protocol Issues:
  - Antibody Quality: Ensure your primary antibodies for both p-ERK and total ERK are validated and working correctly.[8]
  - Lysis Buffer: Use a lysis buffer containing fresh phosphatase and protease inhibitors to prevent dephosphorylation and degradation of your target proteins.[9][10]
  - Protein Transfer: Confirm efficient protein transfer from the gel to the membrane.[11]
- Paradoxical Activation: In some contexts, particularly in KRAS-mutant cells, MEK inhibition can relieve negative feedback from ERK to RAF, leading to increased RAF activity and a paradoxical increase in MEK and ERK phosphorylation.[6] If you observe this, it is a known resistance mechanism.

Q: How should I quantify my Western blot results?

A: To accurately assess target inhibition, you should quantify the ratio of p-ERK to total ERK.[11] First, probe the membrane for p-ERK. Then, strip the membrane and re-probe with an antibody for total ERK.[8][12] Densitometry analysis of the bands will allow you to normalize the phospho-signal to the total amount of ERK protein, correcting for any variations in protein loading.

Mechanism of Action Assays (Apoptosis, Cell Cycle)

© 2026 BenchChem. All rights reserved.

Q: I see a decrease in cell viability, but my apoptosis assay (e.g., Caspase-Glo, Annexin V) shows no increase in apoptosis.

A: This suggests that BIO-7662 may be having a cytostatic (inhibiting proliferation) rather than a cytotoxic (inducing cell death) effect in your cell line.

- Cytostatic Effect: MEK inhibitors often induce G1 cell cycle arrest.[4] Perform a cell cycle analysis (e.g., via propidium iodide staining and flow cytometry) to see if cells are accumulating in the G1 phase.
- Delayed Apoptosis: Apoptosis may be a delayed response. Extend the time course of your apoptosis assay (e.g., to 48 or 72 hours) to capture later events.[6]
- Assay Choice: Distinguish between reduced metabolic activity and actual cell death. If using a metabolic assay like MTT, consider an orthogonal method like cell counting to confirm the anti-proliferative effect.[6]

Data Presentation

Table 1: Representative IC50 Values of BIO-7662 in Cancer Cell Lines

The following table provides example IC50 values after 72 hours of treatment, demonstrating the differential sensitivity based on genetic background.

Cell Line	Cancer Type	Key Mutation	BIO-7662 IC50 (nM)	Expected Sensitivity
A375	Melanoma	BRAF V600E	15	High
HCT116	Colorectal	KRAS G13D	250	Moderate
HT-29	Colorectal	BRAF V600E	25	High
MCF-7	Breast	PIK3CA E545K	>10,000	Low / Resistant
BxPC-3	Pancreatic	KRAS G12D	800	Moderate-Low
SW620	Colorectal	KRAS G12V	450	Moderate

© 2026 BenchChem. All rights reserved.

Table 2: Recommended Starting Conditions for Key Assays

Assay Type	Recommended Concentration Range	Recommended Time Course
Cell Viability (e.g., MTT)	1 nM - 10 µM	48h, 72h, 96h
Western Blot (p-ERK)	10 nM - 5 µM	1h, 4h, 8h, 24h
Apoptosis (Caspase-Glo 3/7)	100 nM - 10 µM	24h, 48h, 72h
Cell Cycle Analysis	100 nM - 5 µM	24h, 48h

Experimental Protocols

Protocol 1: Cell Viability by MTT Assay

This colorimetric assay measures the metabolic activity of viable cells.[6][13]

- Cell Seeding:
  - Trypsinize and count cells, ensuring a single-cell suspension.
  - Seed 5,000-10,000 cells per well in 100 µL of complete medium in a 96-well flat-bottom plate.
  - Incubate for 24 hours at 37°C, 5% CO_2 to allow for cell attachment.[6][14]
- Treatment:
  - Prepare serial dilutions of BIO-7662 in culture medium at 2x the final desired concentration.
  - Remove the old medium from the cells and add 100 µL of the drug dilutions (or vehicle control, e.g., 0.1% DMSO) to the appropriate wells.
  - Incubate for the desired time period (e.g., 72 hours).
- MTT Addition:

© 2026 BenchChem. All rights reserved.

- Add 10 µL of 5 mg/mL MTT solution to each well.[6]
- Incubate for 3-4 hours at 37°C until purple formazan crystals are visible.

- Solubilization:
  - Carefully aspirate the medium from each well.
  - Add 100 µL of DMSO to each well to dissolve the formazan crystals.[5]
  - Shake the plate on an orbital shaker for 10-15 minutes to ensure complete dissolution.[5]
- Data Acquisition:
  - Measure the absorbance at 570 nm using a microplate reader.[6]
  - Calculate cell viability as a percentage relative to the vehicle-treated control wells and plot a dose-response curve to determine the IC50 value.

Protocol 2: Western Blot for p-ERK and Total ERK Analysis

This protocol verifies the on-target effect of BIO-7662.[11]

- Cell Seeding and Treatment:
  - Seed cells in a 6-well plate at a density that will result in ~80-90% confluency at the time of lysis.
  - After 24 hours, treat cells with various concentrations of BIO-7662 and a vehicle control for the desired time (e.g., 4 hours).
- Cell Lysis:
  - Wash cells once with ice-cold PBS.
  - Add 100-150 µL of ice-cold RIPA buffer supplemented with protease and phosphatase inhibitors.[9]

© 2026 BenchChem. All rights reserved.

- Scrape the cells and transfer the lysate to a pre-chilled microcentrifuge tube.[11]
- Incubate on ice for 30 minutes, vortexing briefly every 10 minutes.[11]
- Centrifuge at 16,000 x g for 20 minutes at 4°C to pellet cell debris.[11]
- Transfer the clear supernatant to a new tube.

- Protein Quantification:
  - Determine the protein concentration of each lysate using a BCA or Bradford assay.
- Sample Preparation and SDS-PAGE:
  - Normalize all samples to the same concentration with lysis buffer. Mix with 4x Laemmli sample buffer and boil at 95°C for 5 minutes.[11]
  - Load equal amounts of protein (e.g., 20-40 µg) per lane onto a 10% or 12% SDS-polyacrylamide gel.[11]
- Protein Transfer and Blocking:
  - Transfer proteins to a PVDF membrane.
  - Block the membrane with 5% non-fat dry milk or 5% BSA in TBST for 1 hour at room temperature.[9]
- Antibody Incubation:
  - Incubate the membrane with primary antibody against p-ERK1/2 (e.g., 1:1000 dilution in 5% BSA/TBST) overnight at 4°C with gentle agitation.[8][9]
  - Wash the membrane three times with TBST.
  - Incubate with an HRP-conjugated secondary antibody (e.g., 1:5000) for 1 hour at room temperature.[8]
- Detection and Re-probing:

© 2026 BenchChem. All rights reserved.

- Wash three times with TBST.
- Apply an ECL substrate and image the bands.
- To probe for total ERK, strip the membrane using a mild stripping buffer, block again, and re-probe with an antibody for total ERK1/2.[12]

Protocol 3: Apoptosis by Caspase-Glo® 3/7 Assay

This luminescent assay measures the activity of caspases 3 and 7, key effectors of apoptosis.[15]

- Cell Seeding:
  - Seed 10,000 cells per well in 100 µL of medium in an opaque-walled 96-well plate suitable for luminescence readings.[16][17]
  - Include wells for a "no-cell" background control.
  - Incubate for 24 hours at 37°C, 5% CO_2.
- Treatment:
  - Treat cells with a serial dilution of BIO-7662 and a vehicle control. Include a positive control for apoptosis (e.g., staurosporine).
  - Incubate for the desired time period (e.g., 24 or 48 hours).
- Assay Procedure (Add-Mix-Measure):
  - Equilibrate the plate and the Caspase-Glo® 3/7 Reagent to room temperature before use.[18]
  - Add 100 µL of Caspase-Glo® 3/7 Reagent directly to each well, resulting in a 1:1 ratio of reagent to sample volume.[15][18]
  - Mix the contents on a plate shaker at 300-500 rpm for 30 seconds.[18]
  - Incubate at room temperature for 1 to 3 hours, protected from light.

© 2026 BenchChem. All rights reserved.

- Data Acquisition:
  - Measure the luminescence using a plate-reading luminometer.
  - Subtract the average background reading (no-cell control) from all experimental readings.
  - Plot the relative luminescence units (RLU) against the inhibitor concentration.

Need Custom Synthesis?

BenchChem offers custom synthesis for rare earth carbides and specific isotopiclabeling.

Email: info@benchchem.com or Request Quote Online.

References

- 1. ERK/MAPK signalling pathway and tumorigenesis - PMC [pmc.ncbi.nlm.nih.gov]
- 2. MAPK/ERK pathway - Wikipedia [en.wikipedia.org]
- 3. researchgate.net [researchgate.net]
- 4. tandfonline.com [tandfonline.com]
- 5. benchchem.com [benchchem.com]
- 6. benchchem.com [benchchem.com]
- 7. Efficacy of the combination of MEK and CDK4/6 inhibitors in vitro and in vivo in KRAS mutant colorectal cancer models - PMC [pmc.ncbi.nlm.nih.gov]
- 8. researchgate.net [researchgate.net]
- 9. Western blot analysis of phosphorylated (p)-ERK and ERK [bio-protocol.org]
- 10. sigmaaldrich.com [sigmaaldrich.com]
- 11. benchchem.com [benchchem.com]
- 12. Measuring agonist-induced ERK MAP kinase phosphorylation for G-protein-coupled receptors - PMC [pmc.ncbi.nlm.nih.gov]
- 13. Cell Viability Assays - Assay Guidance Manual - NCBI Bookshelf [ncbi.nlm.nih.gov]
- 14. benchchem.com [benchchem.com]
- 15. Caspase-Glo® 3/7 Assay Protocol [promega.com]

- 16. Caspase-Glo® 3/7 Assay System | Caspase 3 Activity Assay | Apoptosis Detection [promega.com]
- 17. FAQ: Caspase-Glo® 3/7 Assay System [promega.sg]
- 18. promega.com [promega.com]
- To cite this document: BenchChem. [improving BIO7662 efficacy in cell-based assays]. BenchChem, [2026]. [Online PDF]. Available at: [https://www.benchchem.com/product/b12368099/docs#improving-bio7662-efficacy-in-cell-based-assays]

Disclaimer & Data Validity:

The information provided in this document is for Research Use Only (RUO) and is strictly not intended for diagnostic or therapeutic procedures. While BenchChem strives to provide accurate protocols, we make no warranties, express or implied, regarding the fitness of this product for every specific experimental setup.

Technical Support: The protocols provided are for reference purposes. Unsure if this reagent suits your experiment?

Need Industrial/Bulk Grade? Request Custom Synthesis Quote

BenchChem

Our mission is to be the trusted global source of essential and advanced chemicals, empowering scientists and researchers to drive progress in science and industry.

Contact

Address: 3281 E Guasti Rd

Ontario, CA 91761, United States

Phone: (601) 213-4426

Email: info@benchchem.com

Contact our Ph.D. Support Team for a compatibility check

© 2026 BenchChem. All rights reserved.

© 2026 BenchChem. All rights reserved.