Application Note: Determination of Lanoconazole Minimum Inhibitory Concentration (MIC) Following CLSI Guidelines

Author: BenchChem Technical Support Team. **Date**: March 2026

Compound of Interest	
Compound Name:	*Lanoconazole*
CAS No.:	*153222-93-6*
Cat. No.:	*B123884*

Get Quote

Abstract

This document provides a comprehensive guide for determining the in vitro antifungal susceptibility of yeasts and filamentous fungi to **lanoconazole**, a potent imidazole antifungal agent. While the Clinical and Laboratory Standards Institute (CLSI) has not established specific breakpoints or quality control (QC) ranges for **lanoconazole**, this application note presents detailed protocols adapted directly from the CLSI reference methods M27 for yeasts and M38 for filamentous fungi.[1][2][3] This guide is intended for researchers, scientists, and drug development professionals, offering step-by-step methodologies, the scientific rationale behind key experimental choices, and robust quality control procedures to ensure data integrity and reproducibility.

Introduction to **Lanoconazole** and the Imperative for Standardized Susceptibility Testing

Lanoconazole is a topical imidazole antifungal agent that exhibits a broad spectrum of activity against a variety of pathogenic fungi, including dermatophytes, yeasts, and molds.[4][5][6] Its primary mechanism of action involves the highly specific inhibition of the fungal cytochrome P450 enzyme, lanosterol 14α-demethylase.[4][7][8] This enzyme is a critical component in the biosynthesis of ergosterol, an essential sterol that maintains the structural integrity and fluidity

© 2026 BenchChem. All rights reserved.

of the fungal cell membrane.[4][8][9] By disrupting ergosterol synthesis, **lanoconazole** compromises the fungal cell membrane, leading to the cessation of growth and, ultimately, cell death.[4]

The determination of a drug's Minimum Inhibitory Concentration (MIC) is the cornerstone of in vitro susceptibility testing.[10] It provides a quantitative measure of the antifungal agent's potency. For new or existing compounds like **lanoconazole**, establishing a reproducible MIC testing framework is paramount for several reasons:

- Preclinical Assessment: To define the agent's spectrum of activity and compare its potency against established drugs.[10][11]
- Resistance Surveillance: To monitor for the emergence of resistant fungal strains over time.
- Mechanism of Action Studies: To provide a quantitative endpoint for studies investigating fungal resistance mechanisms.

Adherence to standardized methodologies, such as those developed by the Clinical and Laboratory Standards Institute (CLSI), is essential for generating data that is comparable and reproducible across different laboratories.[10][11] This document provides the necessary protocols to apply the rigorous CLSI framework to the study of **lanoconazole**.

Scientific Principles and Methodological Rationale

Before proceeding to the protocols, it is crucial to understand the causality behind the core experimental parameters. These choices are not arbitrary; they are designed to control variables and ensure the self-validation of the experimental system.

The CLSI Broth Microdilution Framework

The CLSI documents M27 (for yeasts) and M38 (for filamentous fungi) describe the reference broth microdilution methods for antifungal susceptibility testing.[1][2][3][12] These methods are considered the "gold standard" and form the basis for the protocols in this guide. The core principle is to challenge a standardized fungal inoculum with serial twofold dilutions of the antifungal agent in a 96-well microtiter plate format.

Critical Experimental Parameters

© 2026 BenchChem. All rights reserved.

- Test Medium (RPMI-1640): The standardized medium is RPMI-1640, supplemented with L-glutamine and buffered to a pH of 7.0 with 3-(N-morpholino)propanesulfonic acid (MOPS).[13] This synthetic medium provides essential nutrients for fungal growth while the MOPS buffer prevents pH shifts that could otherwise alter the activity of the pH-sensitive azole antifungal.

- Inoculum Standardization: The density of the starting fungal inoculum can significantly impact the final MIC value (an effect known as the "inoculum effect"). Therefore, the fungal suspension must be meticulously standardized. This is achieved by adjusting the turbidity to a 0.5 McFarland standard, which corresponds to a known cell density, and then performing a precise dilution to achieve the final target concentration in the test wells.[14] For yeasts, the final inoculum concentration should be between 0.5×10^3 and 2.5×10^3 CFU/mL.[13][15] For filamentous fungi, it is typically higher, ranging from 0.4×10^4 to 5×10^4 CFU/mL.[13]

- Drug Solubilization (DMSO): **Lanoconazole**, like other azoles, is hydrophobic and has poor aqueous solubility. To create a working stock solution, a non-aqueous solvent is required. Dimethyl sulfoxide (DMSO) is the recommended solvent.[16] It is critical, however, that the final concentration of DMSO in the test wells does not exceed 1% (v/v), as higher concentrations can inhibit fungal growth and confound the results.[17]

- Endpoint Determination (Reading the MIC): As an azole, **lanoconazole** is primarily fungistatic. Therefore, the MIC is not necessarily the concentration that causes a complete absence of growth. For azoles, the CLSI recommends reading the MIC as the lowest drug concentration that causes a significant (typically ≥50%) reduction in growth compared to the drug-free growth control well.[18] This contrasts with fungicidal agents like amphotericin B, where the endpoint is 100% growth inhibition.[18]

Detailed Experimental Protocols

The following sections provide step-by-step methodologies for determining the MIC of **lanoconazole**. It is imperative to use aseptic techniques throughout the entire process.

Protocol 1: Broth Microdilution MIC Assay for Yeasts

(Adapted from CLSI Document M27)[3][13][19]

Materials:

© 2026 BenchChem. All rights reserved.

- **Lanoconazole** analytical powder
- Dimethyl sulfoxide (DMSO), sterile
- RPMI-1640 medium (with L-glutamine, without bicarbonate, buffered with MOPS to pH 7.0)
- Yeast strains (e.g., Candida spp., Cryptococcus spp.) and QC strains (C. parapsilosis ATCC 22019, C. krusei ATCC 6258)[20]
- Sabouraud Dextrose Agar (SDA) plates
- Sterile 0.85% saline
- Sterile, flat-bottom 96-well microtiter plates
- Spectrophotometer and 0.5 McFarland standard
- Incubator (35°C)

Procedure:

- Preparation of **Lanoconazole** Stock Solution: a. Accurately weigh the **lanoconazole** powder and dissolve it in 100% DMSO to create a high-concentration stock solution (e.g., 1280 µg/mL).[16] The concentration should be at least 10 times the highest concentration to be tested. b. Dispense into small aliquots in sterile cryovials and store at -70°C until use. Avoid repeated freeze-thaw cycles.
- Inoculum Preparation: a. Subculture the yeast isolate onto an SDA plate and incubate at 35°C for 24-48 hours to ensure purity and viability. b. Select several well-isolated colonies and suspend them in sterile saline. c. Vortex the suspension for 15 seconds to ensure homogeneity. d. Adjust the turbidity of the suspension to match a 0.5 McFarland standard using a spectrophotometer (at 530 nm) or by visual comparison. This suspension contains approximately 1-5 x 10^6 CFU/mL. e. Prepare the final inoculum by diluting the 0.5 McFarland suspension 1:1000 in RPMI-1640 medium (e.g., 10 µL of suspension into 10 mL of RPMI). This yields a working inoculum of 1-5 x 10^3 CFU/mL, which will be further diluted 1:1 in the plate.

© 2026 BenchChem. All rights reserved.

- Microtiter Plate Preparation (Serial Dilution): a. Add 100 µL of RPMI-1640 medium to wells in columns 2 through 11 of a 96-well plate. Well 12 serves as a sterility control. b. Prepare a working solution of **lanoconazole** at twice the highest desired final concentration in RPMI-1640. For example, for a final top concentration of 16 µg/mL, prepare a 32 µg/mL working solution. c. Add 200 µL of this working solution to the wells in column 1. d. Perform a twofold serial dilution by transferring 100 µL from column 1 to column 2. Mix thoroughly by pipetting up and down. e. Continue this serial dilution process from column 2 to column 10. f. After mixing in column 10, discard the final 100 µL. Column 11 serves as the growth control (no drug).

- Inoculation: a. Add 100 µL of the final yeast inoculum (from step 2e) to each well from columns 1 through 11. b. The final volume in these wells will be 200 µL. The drug concentrations are now at their target values, and the inoculum density is between 0.5-2.5 x 10^3 CFU/mL.[14] c. Do not add inoculum to column 12 (sterility control).

- Incubation: a. Seal the plate or place it in a humidified container to prevent evaporation. b. Incubate at 35°C for 24-48 hours.[15]

- Endpoint Determination: a. Using a microplate reading mirror or an inverted microscope, examine the wells. The growth control (column 11) should show distinct turbidity or a cell pellet. The sterility control (column 12) should be clear. b. The MIC is the lowest concentration of **lanoconazole** that results in a prominent (≥50%) reduction in turbidity compared to the growth control.

Protocol 2: Broth Microdilution MIC Assay for Filamentous Fungi

(Adapted from CLSI Document M38)[2][12][21]

Materials:

- Same as for the yeast protocol, with the addition of Potato Dextrose Agar (PDA) for fungal culture.

- QC Strains: Aspergillus fumigatus ATCC 204305 or Paecilomyces variotii ATCC MYA-3630.[21]

© 2026 BenchChem. All rights reserved.

- Sterile, Tween 20 solution (0.05%) (optional, to aid conidia harvesting).
- Hemocytometer.

Procedure:

- Preparation of **Lanoconazole** Stock Solution: Follow the same procedure as in Protocol 1 (Section 3.1, Step 1).
- Inoculum Preparation: a. Culture the fungus on a PDA plate at 35°C for 7-14 days, or until adequate sporulation is observed.[22] b. Harvest the conidia by gently flooding the plate with sterile saline (optionally containing 0.05% Tween 20). c. Gently rub the surface with a sterile swab to dislodge the conidia. d. Transfer the resulting suspension to a sterile tube and allow the heavy particles to settle for 5 minutes. e. Transfer the upper conidial suspension to a new tube. f. Count the conidia using a hemocytometer and adjust the concentration with RPMI-1640 to achieve a working inoculum of 0.8×10^4 to 10×10^4 CFU/mL. This will be diluted 1:1 in the plate.
- Microtiter Plate Preparation and Inoculation: Follow the same procedures as in Protocol 1 (Section 3.1, Steps 3 and 4), using the filamentous fungi inoculum.
- Incubation: a. Seal the plate and incubate at 35°C. b. Incubation time is species-dependent and should be determined by the growth in the control well. Typically, this is 48-72 hours for Aspergillus spp.[16][23]
- Endpoint Determination: a. The MIC is determined as the lowest concentration of **lanoconazole** that shows complete inhibition of visible growth.[16][24] This is a key difference from the yeast protocol for azoles. However, for some fungus-drug combinations, a partial inhibition endpoint may be more appropriate and should be noted.

Visualization of Experimental Workflows

To clarify the procedural steps, the following diagrams illustrate the key workflows.

© 2026 BenchChem. All rights reserved.

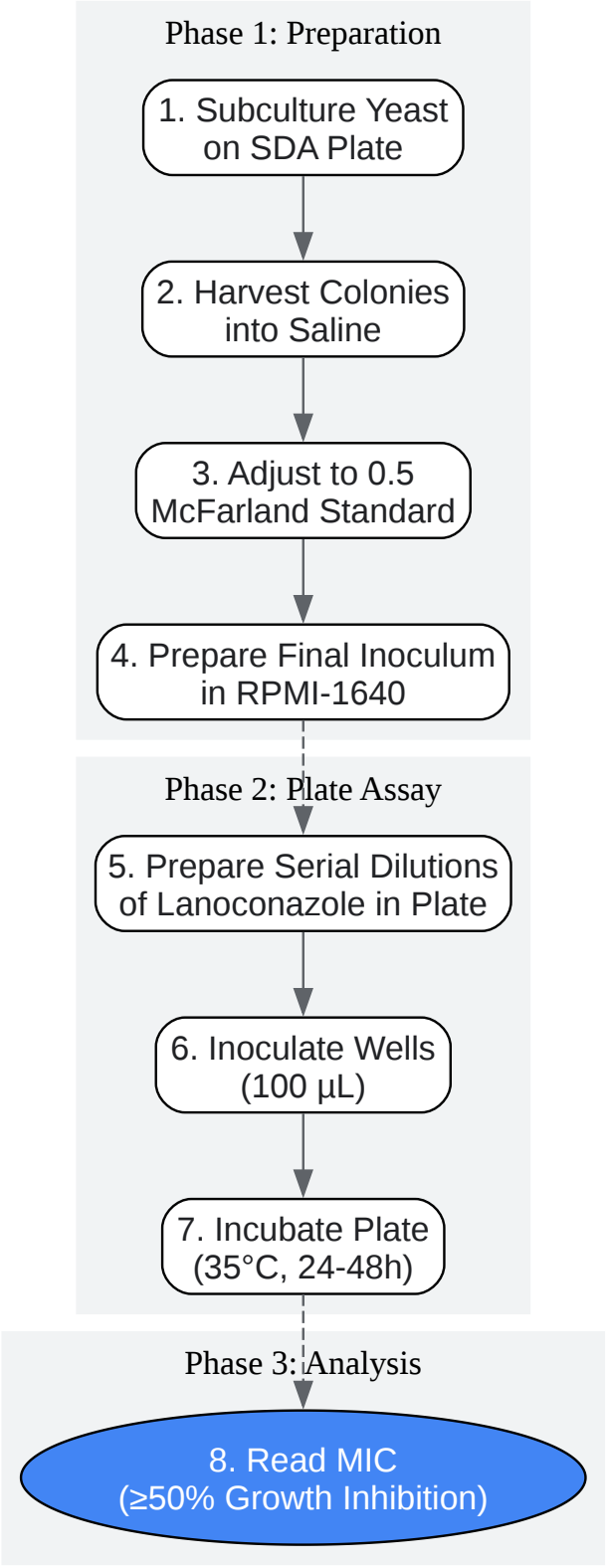

Click to download full resolution via product page

Caption: Workflow for Yeast MIC Determination via Broth Microdilution.

© 2026 BenchChem. All rights reserved.

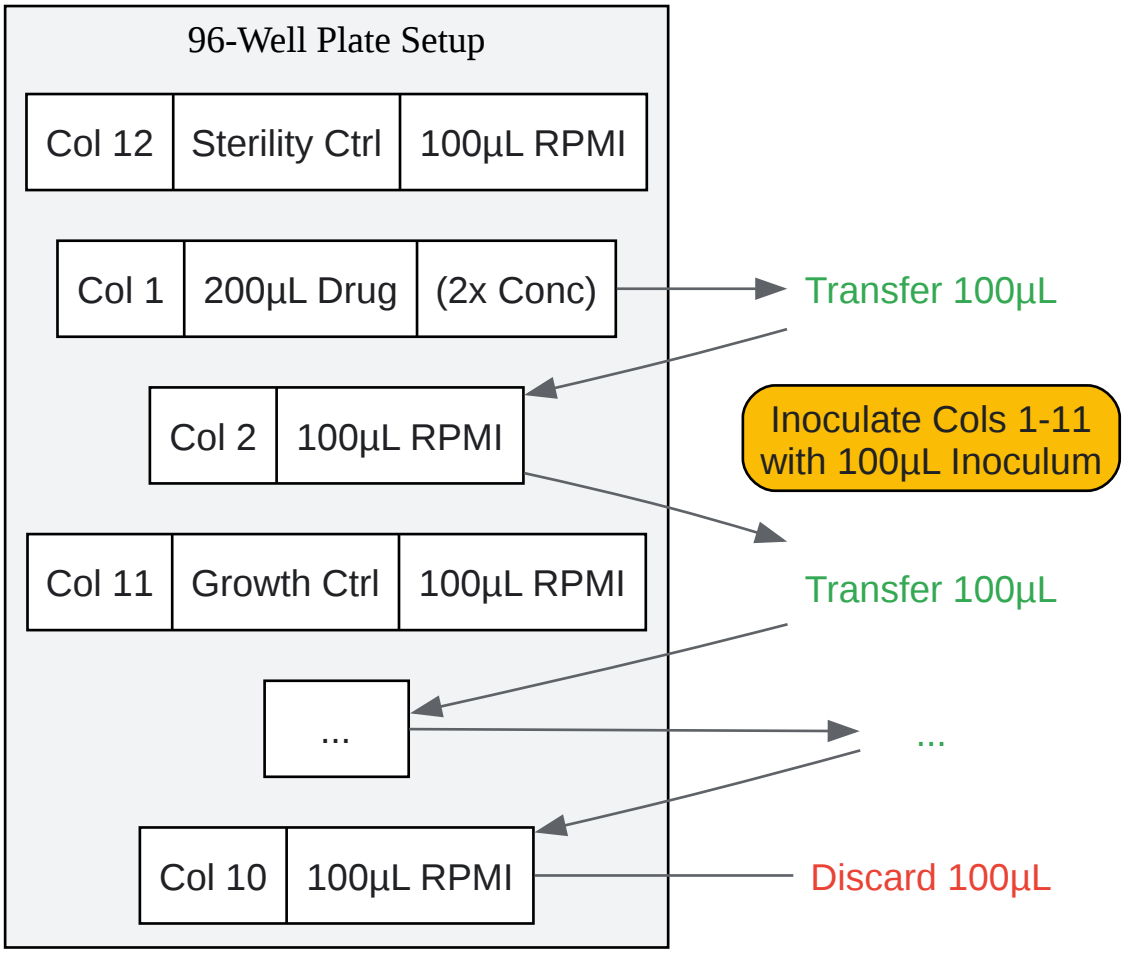

Click to download full resolution via product page

Caption: Diagram of the Twofold Serial Dilution Process in a Microtiter Plate.

Quality Control and Data Interpretation

Mandatory Quality Control

Robust QC is the cornerstone of trustworthy data.[21] Each time a batch of MICs is determined, one or more reference QC strains must be included.[20] Since official CLSI QC ranges for **lanoconazole** do not exist, system performance must be validated using a well-characterized azole antifungal, such as voriconazole or itraconazole. The resulting MIC for the control drug against the QC strain must fall within the established acceptable range.

Table 1: CLSI-Established MIC Quality Control Ranges for Voriconazole (Source: Adapted from CLSI M60 and related documents)[25]

© 2026 BenchChem. All rights reserved.

Quality Control Strain	Organism Type	Voriconazole MIC Range (µg/mL)
Candida parapsilosis ATCC 22019	Yeast	0.015 - 0.12
Candida krusei ATCC 6258	Yeast	0.06 - 0.5
Aspergillus fumigatus ATCC 204305	Filamentous Fungus	0.12 - 0.5
Paecilomyces variotii ATCC MYA-3630	Filamentous Fungus	0.015 - 0.12

Note: These ranges are for voriconazole and serve as a system validation. They are not the expected ranges for **lanoconazole**.

Interpreting Lanoconazole MIC Values

The raw MIC value represents the in vitro potency of **lanoconazole** against a specific fungal isolate. It is important to note that without established clinical breakpoints, one cannot classify an isolate as "Susceptible," "Intermediate," or "Resistant" to **lanoconazole**. Instead, the data should be used for comparative purposes or to establish an Epidemiological Cutoff Value (ECV) as described in CLSI document M57.[26] An ECV can help distinguish wild-type (WT) isolates from those with potential resistance mechanisms.

Potential Pitfall: The Trailing Effect

Some fungus-drug combinations, particularly with azoles and Candida species, may exhibit a "trailing" or "paradoxical growth" effect, where a reduced but persistent amount of growth is observed at concentrations above the MIC.[27][28][29] This can make the ≥50% inhibition endpoint difficult to determine. When this occurs, it is crucial to read the plates after the recommended 24-hour incubation period for yeasts, as trailing often becomes more pronounced with longer incubation.

Conclusion

© 2026 BenchChem. All rights reserved.

By meticulously adapting the CLSI M27 and M38 reference methods, researchers can generate reliable and reproducible MIC data for **lanoconazole**. This application note provides the detailed protocols and scientific rationale necessary to ensure the integrity of in vitro susceptibility testing. Adherence to these standardized procedures, including stringent quality control, is critical for building a robust dataset that can accurately inform preclinical drug development and fungal resistance research.

References

- The Caspofungin Paradoxical Effect is a Tolerant “Eagle Effect” in the Filamentous Fungal Pathogen Aspergillus fumigatus.PMC. [Link]
- What is **Lanoconazole** used for?Patsnap Synapse. [Link]
- Quality Control and Reference Guidelines for CLSI Broth Microdilution Susceptibility Method (M38-A Document) for Amphotericin B, Itraconazole, Posaconazole, and Voriconazole.Journal of Clinical Microbiology. [Link]
- Assessment of the Paradoxical Effect of Caspofungin in Therapy of Candidiasis.PMC. [Link]
- New Antifungal Document Editions.CLSI. [Link]
- Paradoxical Effect of Caspofungin against Candida Bloodstream Isolates Is Mediated by Multiple Pathways but Eliminated in Human Serum.Antimicrobial Agents and Chemotherapy - ASM Journals. [Link]
- The Caspofungin Paradoxical Effect is a Tolerant "Eagle Effect" in the Filamentous Fungal Pathogen Aspergillus fumigatus.PubMed. [Link]
- Antifungal Susceptibility Testing: Current Approaches.Clinical Microbiology Reviews. [Link]
- Genomic and Molecular Identification of Genes Contributing to the Caspofungin Paradoxical Effect in Aspergillus fumigatus.Microbiology Spectrum - ASM Journals. [Link]
- CLSI Antifungical Susceptibility Test Updated.Scribd. [Link]
- **Lanoconazole**: Uses, Dosage, Side Effects and More.MIMS Indonesia. [Link]

© 2026 BenchChem. All rights reserved.

- Antifungal Susceptibility of Yeasts and Filamentous Fungi by CLSI Broth Microdilution Testing.PubMed. [Link]
- M38 | Reference Method for Broth Dilution Antifungal Susceptibility Testing of Filamentous Fungi.Clinical & Laboratory Standards Institute | CLSI. [Link]
- Quality Control Guidelines for Amphotericin B, Itraconazole, Posaconazole, and Voriconazole Disk Diffusion Susceptibility Tests with Nonsupplemented Mueller-Hinton Agar (CLSI M51-A Document) for Nondermatophyte Filamentous Fungi.ASM Journals. [Link]
- Determination of Antifungal MICs by a Rapid Susceptibility Assay.ASM Journals. [Link]
- Mycology – Susceptibility Testing of Yeast and Filamentous Fungi.Public Health Ontario. [Link]
- Clinical and Laboratory Standards Institute Document Submission.Regulations.gov. [Link]
- Antifungal Susceptibility Testing of Yeasts using Gradient Diffusion Strips.CDC. [Link]
- Antifungal Susceptibility of Yeasts and Filamentous Fungi by CLSI Broth Microdilution Testing.Scholars @ UT Health San Antonio. [Link]
- M27 | Reference Method for Broth Dilution Antifungal Susceptibility Testing of Yeasts.CLSI. [Link]
- Antifungal Susceptibility Testing: Current Approaches.PMC. [Link]
- CLSI M60 2020 Performance Standards for Antifungal Susceptibility Testing of Yeasts, 2nd Edition, M60Ed2E.CLSI. [Link]
- Pattern of Antifungal Susceptibility in Pathogenic Molds by Microdilution Method at a Tertiary Care Hospital.Annals of Medical and Health Sciences Research. [Link]
- Quality Control and Reference Guidelines for CLSI Broth Microdilution Susceptibility Method (M38-A Document) for Amphotericin B, Itraconazole, Posaconazole, and Voriconazole.PMC. [Link]
- **Lanoconazole** - Nihon Nohyaku.AdisInsight. [Link]

© 2026 BenchChem. All rights reserved.

- M27M44S | Performance Standards for Antifungal Susceptibility Testing of Yeasts.CLSI. [Link]
- Anti-inflammatory effect of **lanoconazole** on 12-O-tetradecanoylphorbol-13-acetate- and 2,4,6-trinitrophenyl chloride–induced skin inflammation in mice.PMC. [Link]
- Anti-inflammatory activity of **lanoconazole**, a topical antifungal agent.Ovid. [Link]
- M27-A2 Reference Method for Broth Dilution Antifungal Susceptibility Testing of Yeasts; Approved Standard—Second Edition.ResearchGate. [Link]
- Standard Operating Procedures for Fungal Identification and Detection of Antifungal Resistance.Indian Council of Medical Research. [Link]
- **Lanoconazole** and Its Related Optically Active Compound NND-502: Novel Antifungal Imidazoles with a Ketene Dithioacetal Structure.ResearchGate. [Link]
- Reference Method for Broth Dilution Antifungal Susceptibility Testing of Yeasts; Approved Standard—Third Edition.ANSI Webstore. [Link]
- Reference Method for Broth Dilution Antifungal Susceptibility Testing of Filamentous Fungi; Approved Standard— Second Edition.CLSI. [Link]
- Optimal Testing Conditions for Determining MICs and Minimum Fungicidal Concentrations of New and Established Antifungal Agents for Uncommon Molds: NCCLS Collaborative Study.PMC. [Link]
- Antifungal Susceptibility Testing.International Society for Human and Animal Mycology. [Link]
- A Practical Guide to Antifungal Susceptibility Testing.PMC. [Link]
- Optimal Testing Conditions for Determining MICs and Minimum Fungicidal Concentrations of New and Established Antifungal Agents for Uncommon Molds: NCCLS Collaborative Study.ResearchGate. [Link]

© 2026 BenchChem. All rights reserved.

Need Custom Synthesis?

BenchChem offers custom synthesis for rare earth carbides and specific isotopiclabeling.

Email: info@benchchem.com or Request Quote Online.

Sources

- 1. scribd.com [scribd.com]
- 2. M38 | Reference Method for Broth Dilution Antifungal Susceptibility Testing of Filamentous Fungi [clsi.org]
- 3. M27 | Reference Method for Broth Dilution Antifungal Susceptibility Testing of Yeasts [clsi.org]
- 4. What is Lanoconazole used for? [synapse.patsnap.com]
- 5. medchemexpress.com [medchemexpress.com]
- 6. researchgate.net [researchgate.net]
- 7. Mechanism of action of Lanoconazole_Chemicalbook [chemicalbook.com]
- 8. Lanoconazole | 153222-93-6 | Benchchem [benchchem.com]
- 9. mims.com [mims.com]
- 10. Antifungal Susceptibility of Yeasts and Filamentous Fungi by CLSI Broth Microdilution Testing - PubMed [pubmed.ncbi.nlm.nih.gov]
- 11. scholars.uthscsa.edu [scholars.uthscsa.edu]
- 12. njccwei.com [njccwei.com]
- 13. journals.asm.org [journals.asm.org]
- 14. pdf.benchchem.com [pdf.benchchem.com]
- 15. Antifungal Susceptibility Testing: Current Approaches - PMC [pmc.ncbi.nlm.nih.gov]
- 16. amhsr.org [amhsr.org]
- 17. journals.asm.org [journals.asm.org]
- 18. A Practical Guide to Antifungal Susceptibility Testing - PMC [pmc.ncbi.nlm.nih.gov]
- 19. webstore.ansi.org [webstore.ansi.org]

© 2026 BenchChem. All rights reserved.

- 20. Antifungal Susceptibility Testing of Yeasts using Gradient Diffusion Strips | Fungal Diseases | CDC [cdc.gov]
- 21. journals.asm.org [journals.asm.org]
- 22. Mycology – Susceptibility Testing of Yeast and Filamentous Fungi | Santé publique Ontario [publichealthontario.ca]
- 23. Optimal Testing Conditions for Determining MICs and Minimum Fungicidal Concentrations of New and Established Antifungal Agents for Uncommon Molds: NCCLS Collaborative Study - PMC [pmc.ncbi.nlm.nih.gov]
- 24. researchgate.net [researchgate.net]
- 25. njccwei.com [njccwei.com]
- 26. New Antifungal Document Editions | News | CLSI [clsi.org]
- 27. The Caspofungin Paradoxical Effect is a Tolerant “Eagle Effect” in the Filamentous Fungal Pathogen Aspergillus fumigatus - PMC [pmc.ncbi.nlm.nih.gov]
- 28. Assessment of the Paradoxical Effect of Caspofungin in Therapy of Candidiasis - PMC [pmc.ncbi.nlm.nih.gov]
- 29. journals.asm.org [journals.asm.org]

- To cite this document: BenchChem. [Application Note: Determination of Lanoconazole Minimum Inhibitory Concentration (MIC) Following CLSI Guidelines]. BenchChem, [2026]. [Online PDF]. Available at: [https://www.benchchem.com/product/b123884#clsi-guidelines-for-lanoconazole-minimum-inhibitory-concentration-mic-testing]

Disclaimer & Data Validity:

The information provided in this document is for Research Use Only (RUO) and is strictly not intended for diagnostic or therapeutic procedures. While BenchChem strives to provide accurate protocols, we make no warranties, express or implied, regarding the fitness of this product for every specific experimental setup.

Technical Support: The protocols provided are for reference purposes. Unsure if this reagent suits your experiment? [Contact our Ph.D. Support Team for a compatibility check]

Need Industrial/Bulk Grade? Request Custom Synthesis Quote

© 2026 BenchChem. All rights reserved.

BenchChem

Our mission is to be the trusted global source of essential and advanced chemicals, empowering scientists and researchers to drive progress in science and industry.

Contact

Address: 3281 E Guasti Rd

Ontario, CA 91761, United States

Phone: (601) 213-4426

Email: info@benchchem.com

© 2026 BenchChem. All rights reserved.