Strategic Utilization of D-Lyxose: Stereochemical Control and Synthetic Applications

Author: BenchChem Technical Support Team. **Date**: May 2026

Compound of Interest

Compound Name:	*Methyl3,4-O-isopropylidene-D-lyxonate*
Cat. No.:	*B12287023*

Get Quote

Executive Summary

D-Lyxose (2S, 3S, 4R-pentose) represents a stereochemical anomaly among natural aldopentoses. Unlike its abundant epimer D-xylose, D-lyxose is rare in nature, found primarily in specific bacterial glycolipids and antibiotics (e.g., avilamycin). For the synthetic chemist, D-lyxose offers a unique scaffold: its vicinal hydroxyl groups at C2 and C3 are cis-oriented, and its pyranose ring dynamics are dominated by severe steric crowding, making it a "loaded spring" for stereoselective transformations.

This guide details the stereochemical behavior of D-lyxose, provides a validated protocol for its thermodynamic trapping as a furanose acetonide, and outlines its critical role in the synthesis of

-galactosylceramide (

-GalCer) immunostimulants.

© 2026 BenchChem. All rights reserved.

The Stereochemical Landscape[1][2]

Conformational Instability and Mutarotation

In aqueous solution, D-lyxose exhibits a complex mutarotation equilibrium. Unlike D-glucose, where the

chair is rigidly stable, D-lyxose suffers from destabilizing axial interactions in both pyranose chair forms.

- -D-Lyxopyranose: Can adopt the

  or

  conformation.[1] The

  form places the C1-OH in an axial position (anomeric effect) but forces the C2, C3, and C4 substituents into specific steric conflicts.
- -D-Lyxopyranose: Predominantly adopts the

  conformation in solution.[1]

Recent high-field NMR and molecular dynamics studies indicate that D-lyxose exists primarily as an equilibrium of pyranose forms, with furanose forms present only in trace amounts (<1%) in pure water, contrasting with D-ribose which has significant furanose content.

Table 1: Aqueous Equilibrium Composition of D-Lyxose (25°C)

© 2026 BenchChem. All rights reserved.

Form	Conformation	Abundance (%)	Stereochemical Driver
-Pyranose		~70%	Anomeric effect stabilizes axial C1-OH; H-bonding networks.
-Pyranose		~28-30%	Equatorial C1-OH; destabilized by 1,3-diaxial interactions.
Furanose Forms	Envelope ( )	< 2%	Thermodynamically less stable in water without protecting groups.

Visualization of Mutarotation Pathways

The following diagram illustrates the interconversion between the open-chain aldehyde and the cyclic hemiacetals.

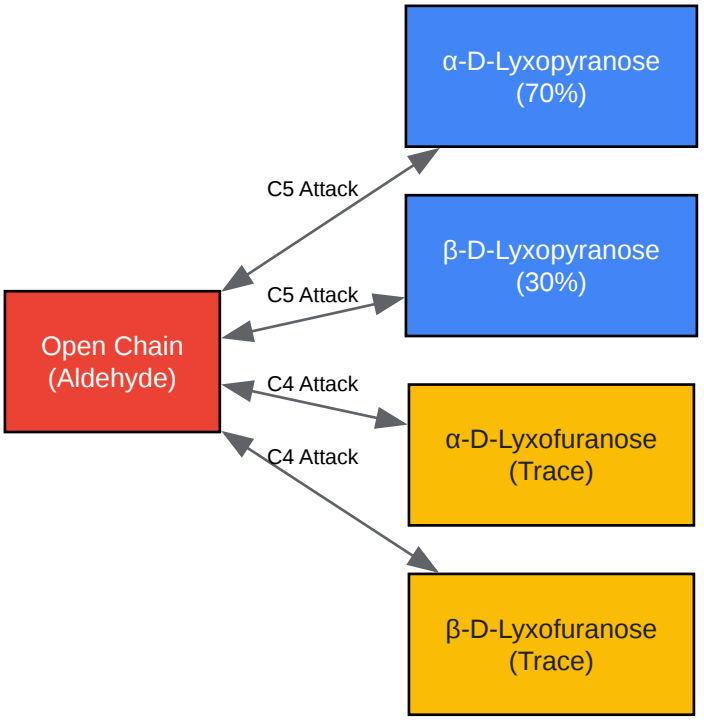

© 2026 BenchChem. All rights reserved.

Click to download full resolution via product page

Caption: Dynamic equilibrium of D-lyxose in aqueous media. Pyranose forms dominate due to ring strain in the furanose isomers.

Synthetic Access: The "Locking" Protocol

While pyranose forms dominate in water, synthetic utility often requires the furanose form. This is achieved by exploiting the cis-diol relationship at C2 and C3. Reaction with acetone under acidic conditions thermodynamically traps D-lyxose as 2,3-O-isopropylidene-D-lyxofuranose.

This protection strategy is pivotal because it:

- Fixes the ring size to 5-membered (furanose).
- Leaves the C1 (anomeric) and C5 (primary) hydroxyls free for differentiation.
- Creates a rigid bicyclic system that directs facial selectivity for subsequent additions.

Protocol: Synthesis of 2,3-O-Isopropylidene-D-lyxofuranose[4]

Objective: Selective protection of the C2-C3 cis-diol to isolate the furanose core.

Reagents:

- D-Lyxose (crystalline)[2]
- Acetone (Reagent grade, dried over molecular sieves)
- Sulfuric Acid (conc.) or Iodine (catalytic)
- Neutralizing agent ($Ca(OH)_2$ or Triethylamine)

Step-by-Step Methodology:

- Suspension: In a flame-dried round-bottom flask equipped with a magnetic stir bar and a drying tube ($CaCl_2$), suspend D-Lyxose (10.0 g, 66.6 mmol) in dry Acetone (200 mL).

© 2026 BenchChem. All rights reserved.

- Catalysis: Add Conc. H_2SO_4 (0.4 mL) dropwise. Note: Iodine (1.5 g) can be used as a milder alternative to avoid charring.
- Reaction: Stir vigorously at room temperature (25°C). The initial suspension will gradually dissolve as the lyxose reacts and enters the solution phase as the acetonide.
    - Checkpoint: Reaction is typically complete within 4–6 hours. Monitor by TLC (Solvent: $CHCl_3$/MeOH 9:1). The product (

) will appear distinct from the baseline lyxose.
- Neutralization: Cool the solution to 0°C. Add $Ca(OH)_2$ (3.0 g) or neutralize with Triethylamine (5 mL) until pH is neutral (check with wet pH paper).
- Filtration: Filter the mixture through a pad of Celite to remove inorganic salts. Wash the pad with fresh acetone.
- Concentration: Concentrate the filtrate under reduced pressure (rotary evaporator, bath temp < 40°C) to yield a pale yellow syrup.
- Purification: The crude syrup often solidifies upon standing. Recrystallization from ether/hexane or column chromatography (Silica gel, Hexane/EtOAc 1:1) yields pure 2,3-O-isopropylidene-D-lyxofuranose as white needles.

Yield: Expect 85–92%. Characterization:

H NMR will show the characteristic gem-dimethyl singlets (~1.3 and 1.5 ppm) and a shift in the anomeric proton, confirming the loss of pyranose equilibrium.

High-Value Application: -GalCer Synthesis

D-Lyxose is the preferred chiral pool starting material for the synthesis of the phytosphingosine chain found in KRN7000 (

-Galactosylceramide), a potent glycolipid activator of invariant Natural Killer T (iNKT) cells.

The Synthetic Logic

© 2026 BenchChem. All rights reserved.

The phytosphingosine backbone requires a specific stereochemistry (2S, 3S, 4R). D-Lyxose provides the correct configuration for the C3 and C4 centers of the lipid chain (which correspond to C2 and C3 of the sugar).

- Wittig Olefination: The "locked" lyxofuranose (from Section 2) is subjected to a Wittig reaction at the anomeric center (C1) to extend the carbon chain to the requisite C18 length.
- Reduction & Deprotection: The double bond is reduced, and the acetonide is hydrolyzed.
- Azide Introduction: The C2-OH (sugar numbering) is inverted to introduce the nitrogen functionality (azide, then amine) required for the ceramide amide bond.

Workflow Visualization

The following diagram maps the transformation of D-Lyxose into the phytosphingosine scaffold.

© 2026 BenchChem. All rights reserved.

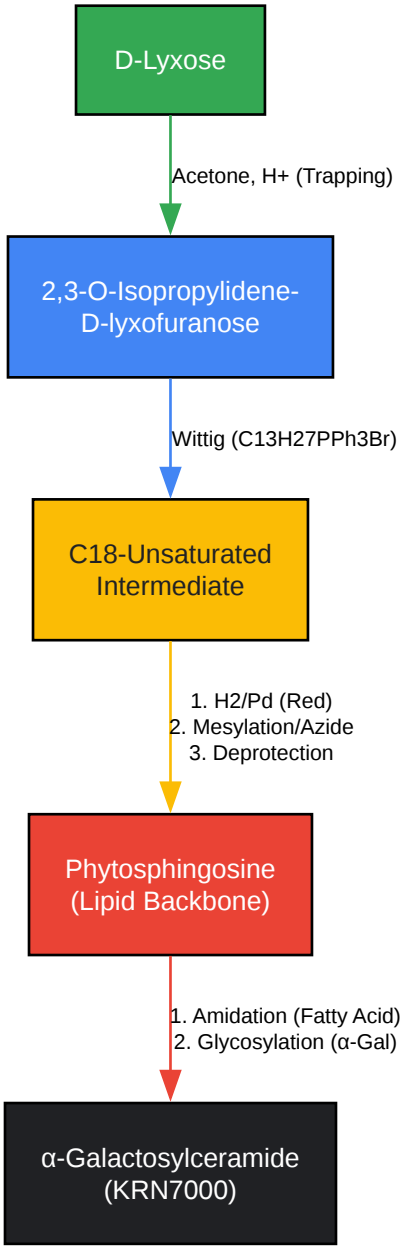

Click to download full resolution via product page

Caption: Synthetic route from D-Lyxose to the immunostimulant KRN7000, highlighting the scaffold utility.

References

- Angyal, S. J. (1984). The Composition of Reducing Sugars in Solution. Advances in Carbohydrate Chemistry and Biochemistry, 42, 15-68.

© 2026 BenchChem. All rights reserved.

- Levene, P. A., & Tipson, R. S. (1936).[2] The Structure of Monoacetone D-Lyxose. Journal of Biological Chemistry, 115, 731-747.
- Fan, G.-T., Pan, Y.-S., & Lee, K.-C. (2013). Concise synthesis of α-galactosyl ceramide from D-galactosyl iodide and D-lyxose.[3][4] Carbohydrate Research, 368, 35-39.[4]
- Ccocca, F., et al. (2011). Conformational behavior of D-lyxose in gas and solution phases. Chemistry - A European Journal. (Relevant data on solution equilibrium).
- Bhat, R. G., et al. (2002). Practical Synthesis of 2,3-O-Isopropylidene-D-lyxono-1,4-lactone. Tetrahedron Letters.

Need Custom Synthesis?

BenchChem offers custom synthesis for rare earth carbides and specific isotopiclabeling.

Email: info@benchchem.com or Request Quote Online.

Sources

- 1. addi.ehu.es [addi.ehu.es]
- 2. 2,3-O-Isopropylidene-α-d-lyxofuranose, the Monoacetone-d-lyxose of Levene and Tipson - PMC [pmc.ncbi.nlm.nih.gov]
- 3. researchgate.net [researchgate.net]
- 4. Concise synthesis of α-galactosyl ceramide from D-galactosyl iodide and D-lyxose - PubMed [pubmed.ncbi.nlm.nih.gov]
- To cite this document: BenchChem. [Strategic Utilization of D-Lyxose: Stereochemical Control and Synthetic Applications]. BenchChem, [2026]. [Online PDF]. Available at: [https://www.benchchem.com/product/b12287023/docs#strategic-utilization-of-d-lyxose-stereochemical-control-and-synthetic-applications]

Disclaimer & Data Validity:

The information provided in this document is for Research Use Only (RUO) and is strictly not intended for diagnostic or therapeutic procedures. While BenchChem strives to provide

accurate protocols, we make no warranties, express or implied, regarding the fitness of this product for every specific experimental setup.

Technical Support: The protocols provided are for reference purposes. Unsure if this reagent suits your experiment?

Need Industrial/Bulk Grade? Request Custom Synthesis Quote

BenchChem

Our mission is to be the trusted global source of essential and advanced chemicals, empowering scientists and researchers to drive progress in science and industry.

Contact

Address: 3281 E Guasti Rd

Ontario, CA 91761, United States

Phone: (601) 213-4426

Email: info@benchchem.com

Contact our Ph.D. Support Team for a compatibility check

© 2026 BenchChem. All rights reserved.