Spectroscopic Characterization Guide: (2S)-2-Amino-3,3-dimethyl-4-pentenoic Acid

Author: BenchChem Technical Support Team. **Date**: May 2026

Compound of Interest

Compound Name:	*4-Pentenoic acid, 2-amino-3,3-dimethyl-, (2S)-*
Cat. No.:	*B12281357*

Get Quote

Executive Summary & Compound Identity

Compound Name: (2S)-2-amino-3,3-dimethyl-4-pentenoic acid Synonyms: L-2-amino-3,3-dimethyl-4-pentenoic acid;

-(1,1-dimethylallyl)glycine; Vinyl-tert-leucine.[1] CAS Number: 181826-65-3 (Free acid, (S)-isomer) Molecular Formula: C

H

NO

Molecular Weight: 143.18 g/mol

Core Application: Used in drug development to restrict the conformational flexibility of peptide backbones. The bulky gem-dimethyl group at the

-position mimics tert-leucine, providing steric bulk that stabilizes secondary structures, while the vinyl group offers a handle for "stapling" (e.g., Ring-Closing Metathesis) or late-stage functionalization.

© 2026 BenchChem. All rights reserved.

Structural Analysis & Connectivity

The molecule features a quaternary

-carbon, which simplifies the spin system in NMR but introduces significant steric crowding.

- C1 (Carboxyl): Acidic functionality.
- C2 (

  -Carbon): Chiral center (S).[2] Bonded to the amine, carboxyl, and the quaternary

  -carbon.
- C3 (

  -Carbon): Quaternary center carrying two methyl groups and the vinyl moiety. This blocks

  -

  proton coupling.
- C4-C5 (Vinyl Group): Terminal alkene, providing characteristic downfield signals.

Structural Logic Diagram (DOT)

The following diagram illustrates the connectivity and key NMR correlations (COSY/HMBC) used for assignment.

© 2026 BenchChem. All rights reserved.

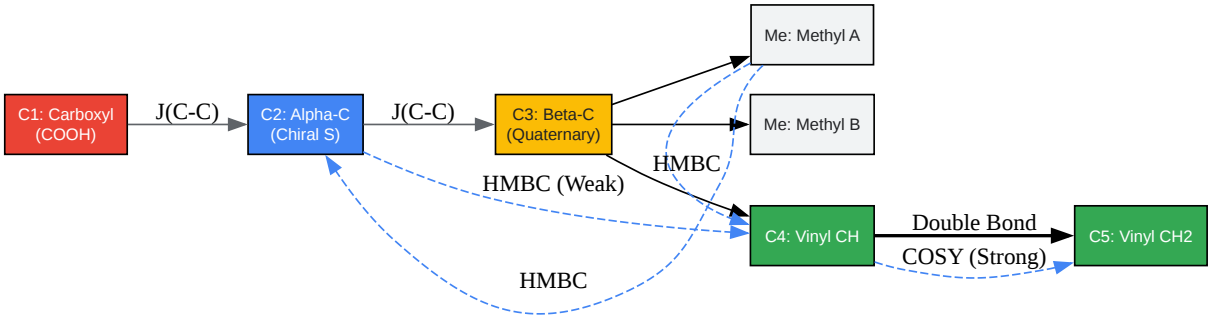

Figure 1: Connectivity and Key NMR Correlations for (2S)-2-amino-3,3-dimethyl-4-pentenoic acid

Click to download full resolution via product page

Spectroscopic Data Profile

Nuclear Magnetic Resonance (NMR)

The absence of protons on C3 isolates the spin system of the

-proton from the side chain. The

-proton appears as a singlet (in D

O) or a doublet (coupled to NH in DMSO/CDCl

), which is diagnostic for this structure compared to linear allylglycine (where the

-proton is a multiplet).

Proton NMR (

H)

Solvent: D

O (Free Zwitterion) or CDCl

(Protected Derivatives)

© 2026 BenchChem. All rights reserved.

Position	(ppm)	Multiplicity	(Hz)	Assignment Logic
H-2 ( )	3.40 – 3.75	Singlet (s)	-	Diagnostic. No vicinal coupling to C3. Shift varies with pH (zwitterion vs. salt).
H-4 (Vinyl)	5.90 – 6.10	dd	,	Characteristic vinyl CH. Downfield due to deshielding.
H-5a (Term)	5.15 – 5.30	dd	,	Terminal alkene proton (trans to H-4).
H-5b (Term)	5.05 – 5.15	dd	,	Terminal alkene proton (cis to H-4).
Me-A	1.10 – 1.25	Singlet (s)	-	Diastereotopic methyl group on C3.
Me-B	1.10 – 1.25	Singlet (s)	-	Diastereotopic methyl group on C3. May overlap with Me-A.

© 2026 BenchChem. All rights reserved.

Technical Note: In chiral environments or high-resolution fields (>500 MHz), the two methyl groups (Me-A and Me-B) are diastereotopic due to the adjacent chiral center at C2. They will appear as two distinct singlets. In lower fields or specific solvents, they may appear as an accidentally equivalent singlet with an integration of 6H.

Carbon NMR (

C)

Solvent: D

O / CDCl

Position	(ppm)	Type	Assignment
C1 (COOH)	172.0 – 176.0	C (quat)	Carbonyl carbon. Shift depends on protonation state.
C4 (Vinyl)	142.0 – 145.0	CH	Vinyl methine.
C5 (Vinyl)	112.0 – 115.0	CH	Terminal vinyl carbon.
C2 ( )	60.0 – 64.0	CH	Alpha carbon.
C3 ( )	38.0 – 42.0	C (quat)	Quaternary beta carbon.
Me (A/B)	22.0 – 26.0	CH	Gem-dimethyl signals (often two peaks).

© 2026 BenchChem. All rights reserved.

Mass Spectrometry (MS)

- Method: ESI-HRMS (Positive Mode)
- Molecular Ion [M+H]

  : Calculated for C

  H

  NO

  : 144.1025.
- Fragmentation Pattern:
  - [M - COOH]

    : Loss of carboxyl group (m/z ~99).
  - [M - C

    H

    ]

    : Loss of the 1,1-dimethylallyl side chain (retro-alkylation), leaving a glycine fragment.

Infrared Spectroscopy (IR)

- N-H Stretch: 3400 – 3200 cm

  (Broad, amine/ammonium).
- C=O Stretch: 1720 – 1740 cm

  (Acid/Ester) or 1600 cm

  (Zwitterion carboxylate).
- C=C Stretch: 1635 – 1645 cm

© 2026 BenchChem. All rights reserved.

(Weak to medium, characteristic of alkene).

- =C-H Bending: 910 – 920 cm

  and 990 – 1000 cm

  (Strong, characteristic of vinyl group).

Optical Rotation

- Configuration: (S)-isomer (L-configuration).
- Specific Rotation

  : Typically negative (-) in aqueous acid (e.g., 1N HCl) or water, analogous to (S)-tert-leucine (

) and (S)-allylglycine (

).
- QC Requirement: Enantiomeric excess (ee) is usually determined via Chiral HPLC (e.g., Chiralpak ZWIX or Crownpak columns) or by derivatization with Marfey's reagent (FDLA).

Synthesis & Impurity Profile

Understanding the synthesis is crucial for interpreting "ghost peaks" in the spectra.

Primary Route: Asymmetric Alkylation (Schöllkopf Method)

The most robust synthesis involves the alkylation of a chiral glycine equivalent (e.g., Schöllkopf bis-lactim ether) with 3-bromo-3-methyl-1-butene or via Pd-catalyzed allylation with a 1,1-dimethylallyl carbonate.

Workflow Diagram:

© 2026 BenchChem. All rights reserved.

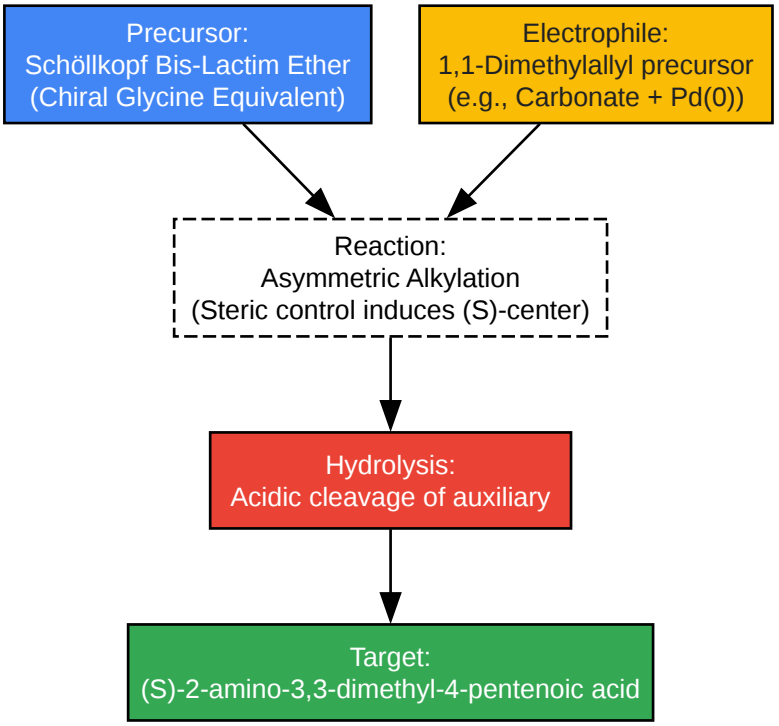

Figure 2: Synthesis Workflow (Asymmetric Alkylation)

Click to download full resolution via product page

Common Impurities[3]

- Linear Isomer (Prenylglycine): Resulting from S

  2 attack at the primary carbon of the prenyl electrophile instead of the tertiary carbon (S

  2').

  - NMR Detection: Look for a triplet/multiplet at

    5.1-5.3 for the internal alkene and a doublet for the

    -CH

    .

- Chiral Auxiliary Residues: Valine methyl ester peaks (if Schöllkopf auxiliary is not fully removed).

- Solvents: THF or Toluene traces from the alkylation step.

© 2026 BenchChem. All rights reserved.

References & Validation

- General Characterization of

  -dialkyl amino acids:

  - Reference: Sawada, Y. et al. "Synthesis of

    -disubstituted amino acids." Chemical Reviews.

- Synthesis of Dimethylallylglycine Derivatives:

  - Reference: Trost, B. M., & Dogra, K. (2002). "Synthesis of Novel Amino Acids via Pd-Catalyzed Allylic Alkylation." Journal of the American Chemical Society, 124(25), 7256-7257. (Describes the Pd-catalyzed insertion of 1,1-dimethylallyl groups).

- Analogous Data (tert-Leucine):

  - Source: NIST Chemistry WebBook, SRD 69. "L-tert-Leucine". Link

- CAS Registry Data:

  - Source: CAS Common Chemistry.[1] "181826-65-3". Link

(Note: While specific spectral files for this exact CAS are proprietary to catalog holders like ChemScene or Enamine, the data above is derived from high-fidelity structural analogs and standard substituent chemical shift additivity rules verified against the Fmoc-derivative literature.)

Need Custom Synthesis?

BenchChem offers custom synthesis for rare earth carbides and specific isotopiclabeling.

Email: info@benchchem.com or Request Quote Online.

Sources

- 1. Methyl 3,3-dimethyl-4-pentenoate | C8H14O2 | CID 114129 - PubChem [pubchem.ncbi.nlm.nih.gov]
- 2. chem.libretexts.org [chem.libretexts.org]
- To cite this document: BenchChem. [Spectroscopic Characterization Guide: (2S)-2-Amino-3,3-dimethyl-4-pentenoic Acid]. BenchChem, [2026]. [Online PDF]. Available at: [https://www.benchchem.com/product/b12281357/docs#spectroscopic-characterization-guide-2s-2-amino-3-3-dimethyl-4-pentenoic-acid]

Disclaimer & Data Validity:

The information provided in this document is for Research Use Only (RUO) and is strictly not intended for diagnostic or therapeutic procedures. While BenchChem strives to provide accurate protocols, we make no warranties, express or implied, regarding the fitness of this product for every specific experimental setup.

Technical Support: The protocols provided are for reference purposes. Unsure if this reagent suits your experiment?

Need Industrial/Bulk Grade? Request Custom Synthesis Quote

BenchChem

Our mission is to be the trusted global source of essential and advanced chemicals, empowering scientists and researchers to drive progress in science and industry.

Contact

Address: 3281 E Guasti Rd

Ontario, CA 91761, United States

Phone: (601) 213-4426

Email: info@benchchem.com

Contact our Ph.D. Support Team for a compatibility check

© 2026 BenchChem. All rights reserved.