Solid-Phase Extraction of Urinary Steroid Hormones: Application Notes and Protocols

Author: BenchChem Technical Support Team. **Date**: April 2026

Compound of Interest

Compound Name:	*Tetrahydroaldosterone-3-glucuronide*
CAS No.:	*20605-81-6*
Cat. No.:	*B1222919*

Get Quote

For Researchers, Scientists, and Drug Development Professionals

This document provides detailed application notes and protocols for the solid-phase extraction (SPE) of steroid hormones from human urine. The methodologies outlined are essential for accurate quantification in clinical research, doping control, and pharmaceutical development.

Introduction

The analysis of urinary steroid hormones is a critical diagnostic tool for assessing the function of endocrine organs and detecting the illicit use of anabolic steroids.[1] Solid-phase extraction (SPE) is a widely adopted sample preparation technique that offers high recovery and robust preconcentration of trace analytes from complex biological matrices like urine.[2] Compared to traditional liquid-liquid extraction (LLE), SPE consumes less solvent and is more amenable to automation.[2][3]

The selection of the appropriate SPE sorbent and optimization of the extraction protocol are crucial for achieving reliable and reproducible results. This document details protocols for

© 2026 BenchChem. All rights reserved.

various SPE chemistries and provides a summary of their performance characteristics.

Experimental Protocols

Sample Pretreatment: Enzymatic Hydrolysis of Steroid Conjugates

In urine, steroids are often present as water-soluble glucuronide and sulfate conjugates. To analyze the total steroid concentration, these conjugates must first be cleaved through enzymatic hydrolysis to release the free steroids.[4]

Materials:

- β-glucuronidase from Helix pomatia or E. coli[4][5]
- Phosphate buffer (0.8 M, pH 6.4) or Acetate buffer (0.2 M, pH 5.5-6.4) or Citrate buffer (0.1 M, pH 5.7-6.5)[5]
- Internal standard solution (e.g., methyltestosterone in methanol)[5]

Procedure:

- To 3 mL of urine, add 1 mL of the selected buffer.[5]
- Add 30 µL of the internal standard solution.[5]
- Add an appropriate amount of β-glucuronidase enzyme. For example, 50 µL of β-glucuronidase type HP-2 from Helix pomatia.[4]
- Vortex the mixture briefly.[5]
- Incubate the sample at 55°C for 70 minutes or at 55°C for 3 hours.[4][5]
- After hydrolysis, cool the sample to room temperature.[6]
- Centrifuge the samples at 2,000 rpm for 10 minutes at 5°C to pellet any precipitates.[4]
- The supernatant is now ready for solid-phase extraction.

© 2026 BenchChem. All rights reserved.

Solid-Phase Extraction (SPE) Protocols

The general steps for SPE include conditioning the sorbent, loading the sample, washing away interferences, and eluting the analytes of interest.

Reversed-phase SPE with C18 sorbents is a classic and widely used method for extracting moderately polar to nonpolar compounds like steroids from aqueous matrices.[7]

Materials:

- C18 SPE cartridges (e.g., 500 mg, 3 mL)
- Methanol
- Deionized water
- Acetonitrile
- Elution solvent (e.g., Methanol or Dichloromethane)[3]

Procedure:

- Conditioning: Condition the C18 SPE cartridge by passing 3 mL of methanol followed by 3 mL of deionized water. Do not allow the cartridge to dry.
- Sample Loading: Load the pre-treated urine sample (from section 2.1) onto the conditioned cartridge at a slow, consistent flow rate (e.g., 1-2 mL/min).
- Washing: Wash the cartridge with 3 mL of deionized water to remove polar interferences. A subsequent wash with a stronger solvent, such as 3 mL of 40% methanol in water, can further remove less polar interferences.
- Drying: Dry the cartridge thoroughly under full vacuum or by centrifugation for at least 5 minutes to remove any residual water.
- Elution: Elute the steroid hormones with 3 mL of methanol or dichloromethane.[3] Collect the eluate in a clean collection tube.

© 2026 BenchChem. All rights reserved.

- Evaporation and Reconstitution: Evaporate the eluate to dryness under a gentle stream of nitrogen at ambient temperature. Reconstitute the residue in a suitable solvent (e.g., 400 µL of 50:50 methanol:water) for subsequent analysis by LC-MS/MS or GC-MS.[4]

Hydrophilic-Lipophilic Balance (HLB) cartridges contain a copolymer sorbent with both hydrophilic and lipophilic groups, providing high recoveries for a broad range of compounds, including various steroid hormones.[1][3]

Materials:

- HLB SPE cartridges
- Methanol
- Deionized water
- Acetone
- Dichloromethane

Procedure:

- Conditioning: Condition the HLB cartridge with 3 mL of methanol followed by 3 mL of deionized water.
- Sample Loading: Apply the pre-treated urine sample to the conditioned cartridge.
- Washing:
  - Wash the cartridge with 3 mL of deionized water.
  - For enhanced cleanup, a wash with a 50:50 (v/v) acetone-water mixture can significantly reduce impurities.[3]
- Drying: Dry the cartridge completely under vacuum.
- Elution: Elute the steroids with dichloromethane for optimal results.[3]

© 2026 BenchChem. All rights reserved.

- Evaporation and Reconstitution: Evaporate the eluate to dryness and reconstitute as described in Protocol 1.

For enhanced cleanup, a two-step SPE procedure can be employed. A C8 cartridge is used for the initial extraction and concentration, followed by an amino cartridge to remove acidic interferences like uric acid.[4]

Materials:

- C8 SPE cartridges (e.g., 500 mg, 3 mL)[4]
- Amino SPE cartridges (e.g., 500 mg, 3 mL)[4]
- Methanol
- Deionized water
- Elution solvent from C8 (e.g., Methanol)

Procedure:

- C8 SPE:
  - Perform steps 1-5 as described in Protocol 1, using a C8 cartridge.
- Amino SPE Cleanup:
  - Condition the Amino SPE tube with an appropriate solvent.
  - Apply the eluate from the C8 SPE tube directly onto the conditioned Amino SPE tube.[4]
  - The steroids will pass through while acidic interferences are retained.[4]
- Evaporation and Reconstitution: Collect the effluent from the amino tube, evaporate to dryness, and reconstitute for analysis.[4]

© 2026 BenchChem. All rights reserved.

Data Presentation: Quantitative Performance of SPE Methods

The following tables summarize the quantitative data from various studies to allow for easy comparison of different SPE methods for urinary steroid hormone analysis.

Table 1: Recovery of Steroid Hormones using Different SPE Sorbents

Steroid Hormone	SPE Sorbent	Recovery (%)	Reference
Prednisolone	C8 + Amino	95 - 99%	[4]
Dexamethasone	C8 + Amino	95 - 99%	[4]
1,4-androstadiene-3,17-dione	C8 + Amino	95 - 99%	[4]
Norgestrel	C8 + Amino	86%	[4]
Cortisone	HLB	98.7 - 103.0%	[1]
Cortisol	HLB	99.5 - 114.2%	[1]
Corticosterone	HLB	100.4 - 110.3%	[1]
Testosterone	HLB	97.9 - 99.8%	[1]
17α-methyltestosterone	HLB	99.5 - 108.6%	[1]
Epitestosterone	HLB	100.6 - 108.8%	[1]
Progesterone	HLB	97.2 - 114.2%	[1]
Various Androgenic Steroids	C18	76.5 - 118.9%	[8]
29 Urinary Steroids	C18	76 - 103%	[9]

Table 2: Limits of Detection (LOD) and Quantification (LOQ) for Urinary Steroid Hormones

© 2026 BenchChem. All rights reserved.

Steroid Hormone	SPE Method	LOD (ng/mL)	LOQ (ng/mL)	Analytical Technique	Reference
Androgens & Corticosteroids	HLB	1.5	5	MEKC-UV	[3]
Progesterone	HLB	7.0	25	MEKC-UV	[3]
39 Urinary Steroids	C18	0.03 - 90	-	LC-MS/MS	[6][10]
29 Urinary Steroids	C18	-	2 - 20	LC-MS/MS	[9]
11 Corticosteroids	SPME	4 - 30	-	LC/MS	[11]
12 Endogenous Steroids	SPE	0.3 - 2.6	-	GCxGC-qMS	[7]

Visualization of Experimental Workflows

The following diagrams illustrate the key experimental workflows described in this document.

© 2026 BenchChem. All rights reserved.

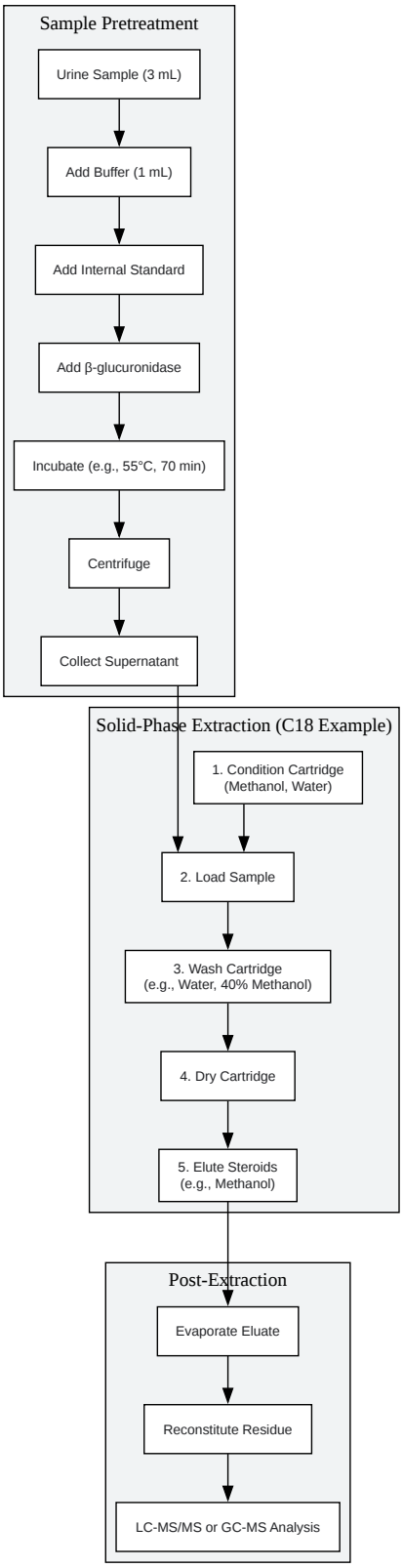

Click to download full resolution via product page

Caption: General workflow for urinary steroid hormone analysis.

© 2026 BenchChem. All rights reserved.

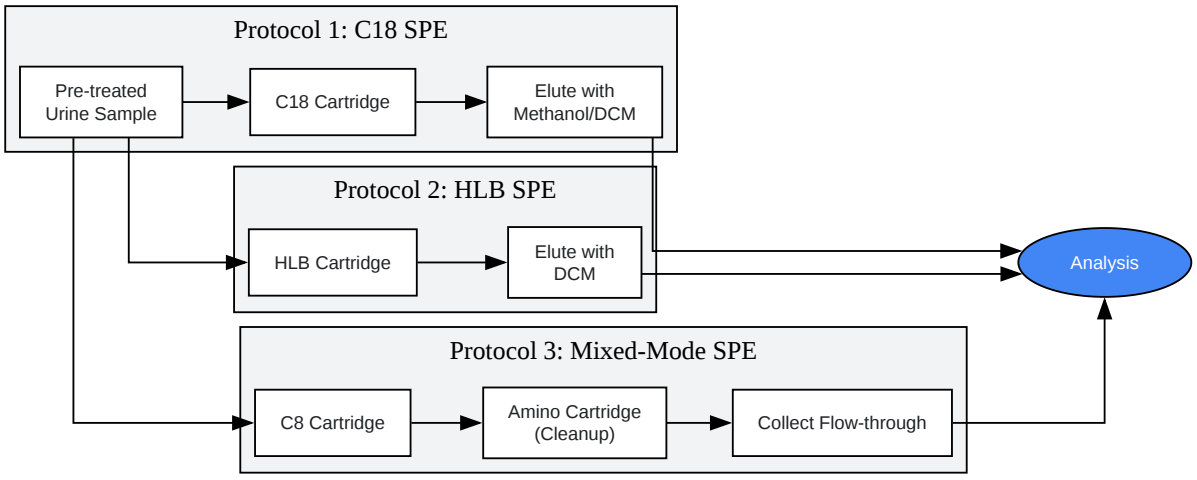

Click to download full resolution via product page

Caption: Comparison of different SPE protocols for urinary steroids.

Need Custom Synthesis?

BenchChem offers custom synthesis for rare earth carbides and specific isotopiclabeling.

Email: info@benchchem.com or Request Quote Online.

References

- 1. Enzymatic detection of urinary conjugated steroids after gel chromatography - PubMed [pubmed.ncbi.nlm.nih.gov]
- 2. Hydrolysis of conjugated steroids by beta-glucuronidase from Ampullaria and application to the determination of urinary 17-hydroxycorticosteroids - PubMed [pubmed.ncbi.nlm.nih.gov]
- 3. Optimization of a Pre-MEKC Separation SPE Procedure for Steroid Molecules in Human Urine Samples - PMC [pmc.ncbi.nlm.nih.gov]
- 4. agilent.com [agilent.com]

© 2026 BenchChem. All rights reserved.

- 5. dshs-koeln.de [dshs-koeln.de]
- 6. Development and validation of an LC-MS/MS method for profiling 39 urinary steroids (estrogens, androgens, corticoids, and progestins) - PubMed [pubmed.ncbi.nlm.nih.gov]
- 7. Highly sensitive and selective analysis of urinary steroids by comprehensive two-dimensional gas chromatography combined with positive chemical ionization quadrupole mass spectrometry - PMC [pmc.ncbi.nlm.nih.gov]
- 8. scispace.com [scispace.com]
- 9. endocrine-abstracts.org [endocrine-abstracts.org]
- 10. researchgate.net [researchgate.net]
- 11. Rapid determination of corticosteroids in urine by combined solid phase microextraction/liquid chromatography/mass spectrometry - PubMed [pubmed.ncbi.nlm.nih.gov]

- To cite this document: BenchChem. [Solid-Phase Extraction of Urinary Steroid Hormones: Application Notes and Protocols]. BenchChem, [2026]. [Online PDF]. Available at: [https://www.benchchem.com/product/b1222919/docs#solid-phase-extraction-of-urinary-steroid-hormones-application-notes-and-protocols]

Disclaimer & Data Validity:

The information provided in this document is for Research Use Only (RUO) and is strictly not intended for diagnostic or therapeutic procedures. While BenchChem strives to provide accurate protocols, we make no warranties, express or implied, regarding the fitness of this product for every specific experimental setup.

Technical Support: The protocols provided are for reference purposes. Unsure if this reagent suits your experiment?

Need Industrial/Bulk Grade? Request Custom Synthesis Quote

© 2026 BenchChem. All rights reserved.

BenchChem

Our mission is to be the trusted global source of essential and advanced chemicals, empowering scientists and researchers to drive progress in science and industry.

Contact

Address: 3281 E Guasti Rd

Ontario, CA 91761, United States

Phone: (601) 213-4426

Email: info@benchchem.com

Contact our Ph.D. Support Team for a compatibility check

© 2026 BenchChem. All rights reserved.