Preventing degradation of Mepronizine in long-term storage

Author: BenchChem Technical Support Team. **Date**: April 2026

Compound of Interest	
Compound Name:	*Mepronizine*
CAS No.:	*51848-48-7*
Cat. No.:	*B1221351*

Get Quote

Mepronizine Stability Technical Support Center

Welcome to the technical support center for **Mepronizine**. This resource is designed for researchers, scientists, and drug development professionals to ensure the long-term stability and integrity of **Mepronizine** in your experiments. Here you will find answers to frequently asked questions, troubleshooting guidance for common degradation issues, and detailed protocols for stability analysis.

Frequently Asked Questions (FAQs)

Q1: What are the ideal long-term storage conditions for **Mepronizine**?

A1: For optimal stability, solid **Mepronizine** should be stored at controlled room temperature, between 15°C and 25°C.[1] It should be protected from light and moisture.[1][2] We recommend storing the compound in amber glass vials or other opaque containers with a tight seal, supplemented with a desiccant.

Q2: My research requires **Mepronizine** to be in solution. How should I store it?

© 2026 BenchChem. All rights reserved.

A2: **Mepronizine** is susceptible to hydrolysis and oxidation in solution. For short-term storage (up to 72 hours), refrigerate solutions at 2°C to 8°C.[1][3] For longer-term storage, we strongly advise preparing solutions fresh. If extended storage is unavoidable, aliquot the solution into airtight, amber vials, purge with an inert gas like nitrogen or argon to remove oxygen, and store frozen at -20°C or below.[1]

Q3: What are the primary pathways of **Mepronizine** degradation?

A3: **Mepronizine** primarily degrades via three pathways:

- Hydrolysis: The ester and carbamate functional groups are susceptible to cleavage in the presence of water, especially at non-neutral pH.
- Oxidation: The phenothiazine core is prone to oxidation, which can be accelerated by exposure to air, light, and trace metal ions.[4]
- Photodegradation: Exposure to UV and visible light can induce degradation, often leading to discoloration of the material.

Q4: Are there any known chemical incompatibilities I should be aware of?

A4: Yes. Avoid strong acids, strong bases, and oxidizing agents, as these will accelerate degradation.[5] Additionally, be cautious with certain excipients. For instance, impurities in some surfactants have been known to accelerate oxidative degradation.[6] Always perform compatibility studies with your specific formulation.

Troubleshooting Guide

Issue 1: My solid **Mepronizine** powder has developed a yellowish or pinkish tint.

- Possible Cause: This is a common sign of photodegradation or oxidation.[3] It indicates that the compound has been exposed to excessive light or air.
- Recommended Actions:
  - Immediately transfer the powder to an amber or opaque, airtight container.
  - Store the container in a dark place, such as a cabinet or drawer.

© 2026 BenchChem. All rights reserved.

- For highly sensitive experiments, consider purging the container headspace with an inert gas before sealing.
- Perform a purity check using the HPLC protocol in Appendix B to quantify the extent of degradation before further use.

Issue 2: HPLC analysis of my **Mepronizine** sample shows new impurity peaks.

- Scenario A: A new peak appears at an earlier retention time than the parent compound.
  - Possible Cause: This often indicates the formation of a more polar degradation product, such as a hydrolysate. This suggests moisture may have been introduced to your sample.
  - Recommended Actions:
    - Review your storage and handling procedures to identify potential sources of moisture.
    - Ensure containers are sealed tightly and stored in a low-humidity environment. Using a desiccator is highly recommended.
    - If working with solutions, ensure your solvents are anhydrous.
- Scenario B: Multiple new peaks are observed, and the baseline is noisy.
  - Possible Cause: This could be a sign of oxidative degradation, which can produce a complex mixture of byproducts.
  - Recommended Actions:
    - Confirm that solutions are not being stored for extended periods at room temperature.
    - When preparing solutions, use solvents that have been de-gassed.
    - If the problem persists, add an antioxidant like BHT to your sample solutions, but first verify its compatibility with your downstream assays.

Issue 3: I am seeing inconsistent potency or activity in my biological assays.

© 2026 BenchChem. All rights reserved.

- Possible Cause: Loss of active **Mepronizine** due to degradation is a likely culprit. The presence of degradation products could also interfere with the assay itself.
- Recommended Actions:
  - Always use freshly prepared **Mepronizine** solutions for critical experiments.
  - Perform a stability check on **Mepronizine** in your specific assay medium. The compound may degrade faster under assay conditions (e.g., in buffer at 37°C).
  - Quantify the **Mepronizine** concentration in your stock solution via HPLC-UV (see Appendix B) immediately before preparing dilutions for your experiment to ensure accurate dosing.

Appendix A: Stability Data

The following tables summarize data from forced degradation studies to illustrate the stability of **Mepronizine** under various stress conditions.

Table 1: Effect of Temperature and Humidity on Solid **Mepronizine** Stability

Storage Condition	Time (Months)	% Degradation	Appearance
25°C / 60% RH	6	< 0.2%	White Powder
40°C / 75% RH	1	0.8%	White Powder
40°C / 75% RH	3	2.5%	Off-white Powder
40°C / 75% RH	6	5.1%	Pale Yellow Powder
60°C / 75% RH	1	4.8%	Yellow Powder

Table 2: Effect of pH and Temperature on **Mepronizine** (1 mg/mL) in Aqueous Solution

© 2026 BenchChem. All rights reserved.

Storage Condition	Time (Hours)	% Degradation
pH 3.0 (HCl) at 40°C	24	15.2%
pH 7.0 (Water) at 40°C	24	3.1%
pH 9.0 (NaOH) at 40°C	24	22.5%
3% H_2O_2 at 25°C	24	35.8%

Appendix B: Experimental Protocols

Protocol 1: Stability-Indicating HPLC-UV Method for **Mepronizine**

This protocol describes a method to separate and quantify **Mepronizine** from its primary degradation products.[7]

- Instrumentation:
  - High-Performance Liquid Chromatography (HPLC) system with a UV detector.[8]
- Materials:
  - Column: C18 reverse-phase column (e.g., 4.6 x 150 mm, 5 µm)
  - Mobile Phase A: 0.1% Formic Acid in Water
  - Mobile Phase B: 0.1% Formic Acid in Acetonitrile
  - Sample Diluent: 50:50 Acetonitrile/Water
- Chromatographic Conditions:
  - Gradient Elution:
    - 0-2 min: 10% B
    - 2-15 min: 10% to 90% B (linear gradient)
    - 15-17 min: 90% B (isocratic)

© 2026 BenchChem. All rights reserved.

    - 17-18 min: 90% to 10% B (linear gradient)
    - 18-22 min: 10% B (isocratic for re-equilibration)
  - Flow Rate: 1.0 mL/min
  - Injection Volume: 10 µL
  - Column Temperature: 30°C
  - UV Detection Wavelength: 254 nm
- Sample Preparation:
  - Accurately weigh and dissolve **Mepronizine** in the sample diluent to a final concentration of approximately 0.5 mg/mL.
  - Vortex/sonicate to ensure complete dissolution.
  - Filter the sample through a 0.45 µm syringe filter before injection.
- Data Analysis:
  - Identify the **Mepronizine** peak based on the retention time of a reference standard.
  - Calculate the area of all peaks. The percent purity is calculated as: (Area of **Mepronizine** Peak / Total Area of All Peaks) * 100.

Appendix C: Visual Guides

The following diagrams illustrate key concepts for understanding and preventing **Mepronizine** degradation.

© 2026 BenchChem. All rights reserved.

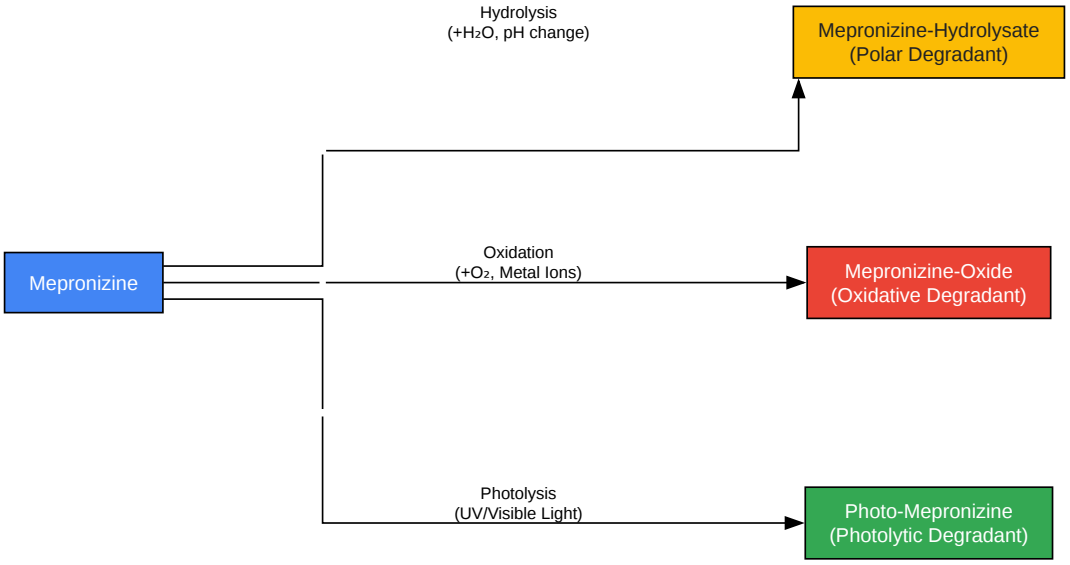

Click to download full resolution via product page

Caption: Primary degradation pathways for **Mepronizine**.

© 2026 BenchChem. All rights reserved.

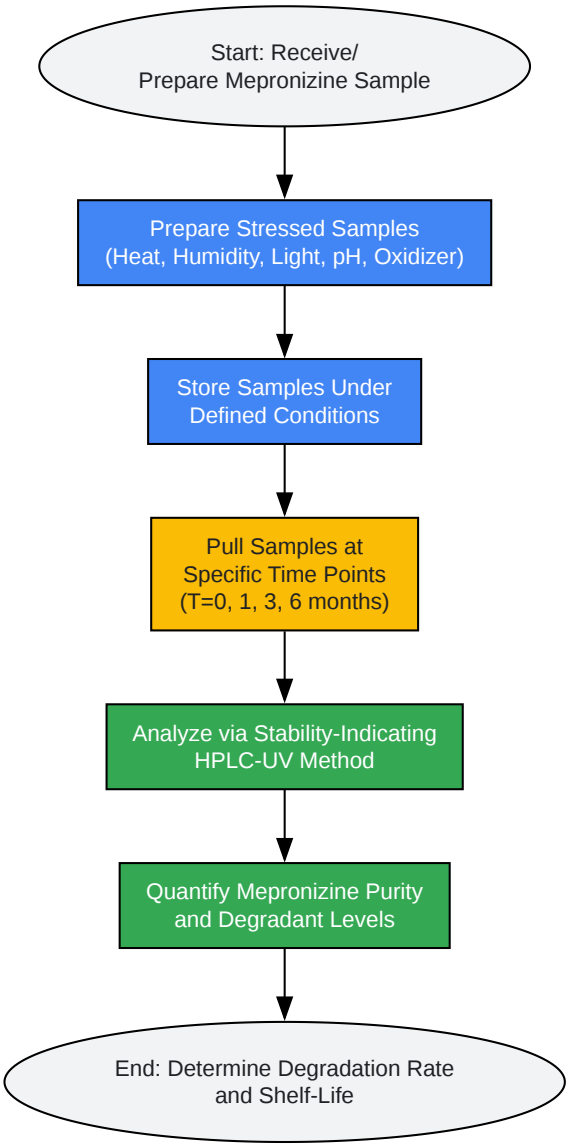

Click to download full resolution via product page

Caption: Experimental workflow for a **Mepronizine** stability study.

© 2026 BenchChem. All rights reserved.

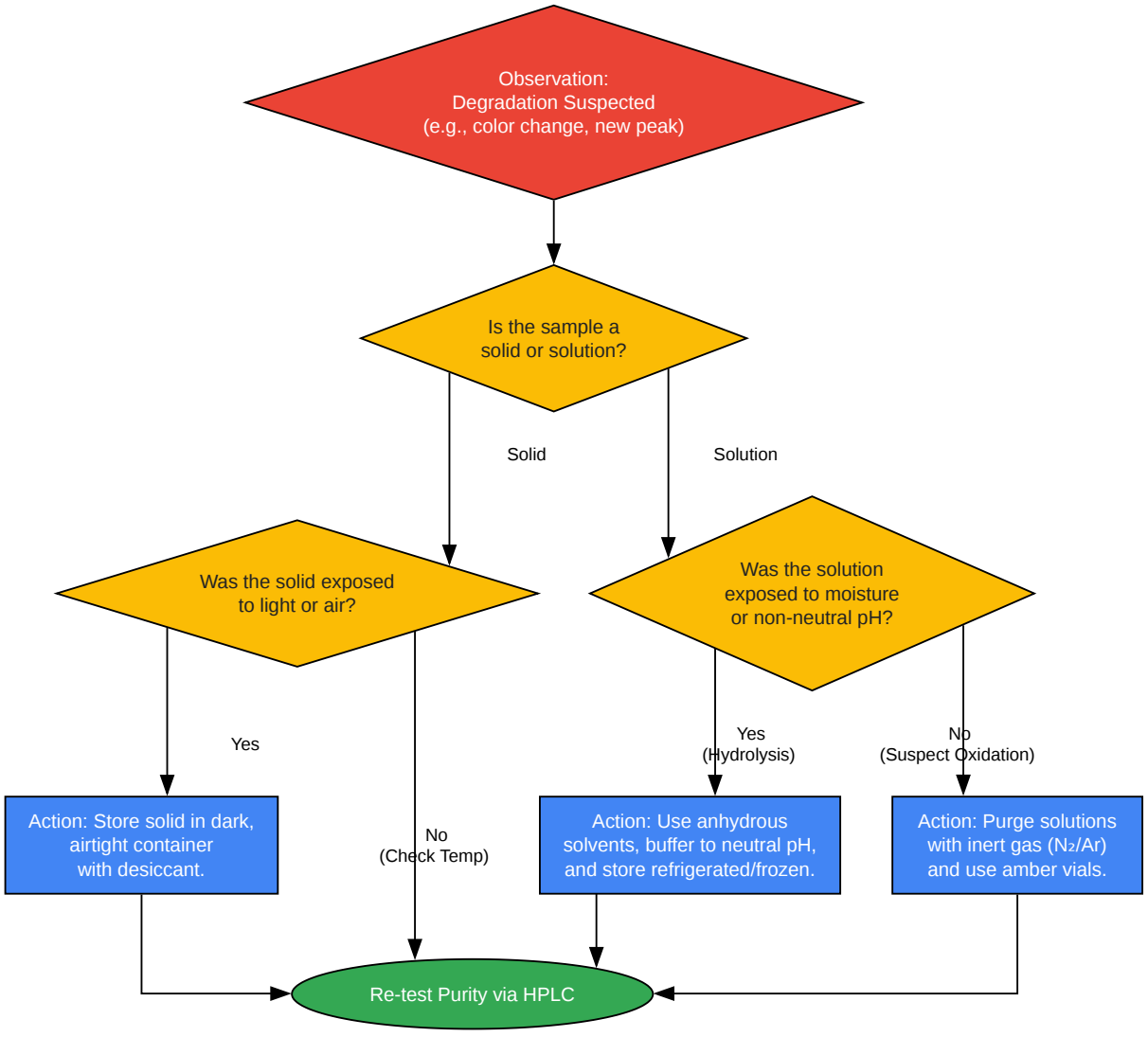

Click to download full resolution via product page

Caption: Troubleshooting logic for **Mepronizine** degradation.

Need Custom Synthesis?

BenchChem offers custom synthesis for rare earth carbides and specific isotopiclabeling.

Email: info@benchchem.com or Request Quote Online.

© 2026 BenchChem. All rights reserved.

References

- 1. viallabeller.com [viallabeller.com]
- 2. moravek.com [moravek.com]
- 3. gmpinsiders.com [gmpinsiders.com]
- 4. researchgate.net [researchgate.net]
- 5. Development of forced degradation and stability indicating studies of drugs—A review - PMC [pmc.ncbi.nlm.nih.gov]
- 6. dissolutiontech.com [dissolutiontech.com]
- 7. Analytical Techniques for Stability Testing: HPLC – StabilityStudies.in [stabilitystudies.in]
- 8. Analytical Techniques In Stability Testing | Separation Science [sepscience.com]

- To cite this document: BenchChem. [Preventing degradation of Mepronizine in long-term storage]. BenchChem, [2026]. [Online PDF]. Available at: [https://www.benchchem.com/product/b1221351/docs#preventing-degradation-of-mepronizine-in-long-term-storage]

Disclaimer & Data Validity:

The information provided in this document is for Research Use Only (RUO) and is strictly not intended for diagnostic or therapeutic procedures. While BenchChem strives to provide accurate protocols, we make no warranties, express or implied, regarding the fitness of this product for every specific experimental setup.

Technical Support: The protocols provided are for reference purposes. Unsure if this reagent suits your experiment?

Need Industrial/Bulk Grade? Request Custom Synthesis Quote

© 2026 BenchChem. All rights reserved.

BenchChem

Our mission is to be the trusted global source of essential and advanced chemicals, empowering scientists and researchers to drive progress in science and industry.

Contact

Address: 3281 E Guasti Rd

Ontario, CA 91761, United States

Phone: (601) 213-4426

Email: info@benchchem.com

Contact our Ph.D. Support Team for a compatibility check

© 2026 BenchChem. All rights reserved.