Technical Support Center: 10-Nitrolinoleic Acid Mass Spectrometry Fragmentation

Author: BenchChem Technical Support Team. **Date**: April 2026

Compound of Interest

Compound Name:	*10-Nitrolinoleic acid*
CAS No.:	*774603-04-2*
Cat. No.:	*B122071*

Get Quote

This technical support center provides troubleshooting guidance and frequently asked questions (FAQs) for researchers, scientists, and drug development professionals working with **10-nitrolinoleic acid** (10-NO_2-LA) mass spectrometry.

Troubleshooting Guides

This section addresses specific issues that may arise during the mass spectrometric analysis of 10-NO_2-LA.

Issue 1: Low or No Signal for the $[M-H]^-$ Ion of 10-NO_2-LA

- Question: I am not observing the expected precursor ion for 10-NO_2-LA at m/z 324.3. What are the potential causes and solutions?
- Answer: Several factors can contribute to a weak or absent precursor ion signal. Consider the following troubleshooting steps:
  - Incorrect Ionization Mode: Ensure your mass spectrometer is operating in negative ion mode. Electrospray ionization (ESI) in negative mode is the preferred method for

© 2026 BenchChem. All rights reserved.

analyzing nitro-fatty acids due to the acidic nature of the carboxylic acid group, which readily forms an $[M-H]^-$ ion.[1]

- Suboptimal Source Parameters: The efficiency of ion generation is highly dependent on the ESI source settings.
  - Source Temperature: A source temperature around 400°C is a good starting point.[1]
  - Capillary Temperature: A capillary temperature of approximately 360°C can be effective.[1]
  - Source Voltage: A source voltage of -3.3 kV has been used successfully.[1]
  - Gas Flows: Sheath gas, auxiliary gas, and sweep gas flows should be optimized for your specific instrument and mobile phase composition. Representative starting values are 30, 15, and 2 arbitrary units, respectively.[1]
- Sample Degradation: Nitro-fatty acids can be unstable under certain conditions.[1] Avoid prolonged exposure to basic conditions or strong acids, which can lead to degradation or artifactual nitration.[1]
- Mobile Phase Composition: The mobile phase should be compatible with negative mode ESI. A common mobile phase consists of a gradient of water and acetonitrile with 0.1% acetic acid.[1] The acetic acid helps to deprotonate the analyte in the ESI process.

Issue 2: Unexpected or Incorrect Fragment Ions in MS/MS Spectra

- Question: My MS/MS spectrum for the m/z 324.3 precursor does not show the expected characteristic fragment ions for 10-NO_2-LA. What should I investigate?
- Answer: The fragmentation of 10-NO_2-LA is complex and yields specific product ions. If you are not observing these, consider the following:
  - Collision Energy: The collision-induced dissociation (CID) energy is a critical parameter. For nitro-fatty acids, a collision energy of around -35 eV is often used to maximize the characteristic losses.[1] If the energy is too low, fragmentation will be inefficient. If it is too high, you may observe excessive fragmentation and loss of structurally informative ions.

© 2026 BenchChem. All rights reserved.

The intensity of the neutral loss of nitrous acid (HNO_2) can decrease with increasing normalized collision energy (NCE).[2]

- Isomer Contamination: Ensure your sample is not contaminated with other isomers of nitrolinoleic acid, such as 9-NO_2-LA, 12-NO_2-LA, or 13-NO_2-LA.[1] Each isomer produces a distinct fragmentation pattern.[1] Good chromatographic separation is essential to distinguish between isomers.[1]

- In-Source Fragmentation: If you observe fragment ions in your full scan MS1 spectrum, this indicates that fragmentation is occurring in the ionization source. This can be caused by high source temperatures or voltages. Try reducing these parameters to obtain a clean precursor ion.

- Instrument Calibration: Verify that your mass spectrometer is properly calibrated across the relevant m/z range.

Issue 3: Difficulty Distinguishing Between 9-NO_2-LA and 10-NO_2-LA Isomers

- Question: How can I confidently differentiate between the 9- and 10-isomers of nitrolinoleic acid using mass spectrometry?

- Answer: While these isomers have the same precursor ion mass, their fragmentation patterns are distinct, allowing for their differentiation.

  - Characteristic Fragments: The collision-induced dissociation of 10-NO_2-LA produces characteristic fragment ions at m/z 182.1, 224.1, and 238.1.[1] In contrast, 9-NO_2-LA yields fragments at m/z 168.1, 210.1, and 224.1.[1] The overall fragmentation pattern of 10-NO_2-LA is shifted by approximately 14 Da (a methylene group) compared to 9-NO_2-LA.[1]

  - Chromatographic Separation: Utilizing a C18 reverse-phase column with a suitable gradient can achieve chromatographic separation of the isomers, further aiding in their identification.[1]

Frequently Asked Questions (FAQs)

- Q1: What is the expected m/z for the deprotonated molecule of **10-nitrolinoleic acid**?

© 2026 BenchChem. All rights reserved.

- A1: The expected m/z for the $[M-H]^-$ ion of **10-nitrolinoleic acid** is 324.3.

- Q2: What are the most common adducts observed for 10-NO_2-LA?
  - A2: In negative ion mode, the primary ion observed is the deprotonated molecule $[M-H]^-$. In positive ion mode, adducts such as $[M+H]^+$, $[M+Li]^+$, $[M+NH_4]^+$, and $[M+Na]^+$ can be observed.[3]

- Q3: What are the key diagnostic fragment ions for 10-NO_2-LA in negative ion mode CID?
  - A3: The key diagnostic fragment ions for 10-NO_2-LA are m/z 182.1, 224.1, and 238.1.[1]

- Q4: What is a typical LC method for separating nitrolinoleic acid isomers?
  - A4: A common method involves using a C18 reverse-phase column (e.g., 2x150 mm, 3 µm particle size) with a gradient of water and acetonitrile, both containing 0.1% acetic acid, at a flow rate of 250 µL/min.[1]

- Q5: Why is negative ion mode preferred for the analysis of 10-NO_2-LA?
  - A5: Negative ion mode is preferred because the carboxylic acid group on the fatty acid is easily deprotonated, leading to high ionization efficiency and sensitivity for detecting the $[M-H]^-$ ion.[1]

Data Presentation

Table 1: Key Mass-to-Charge Ratios (m/z) for 10-NO_2-LA Analysis

Ion Species	m/z	Ionization Mode
Precursor Ion $[M-H]^-$	324.3	Negative ESI
Fragment Ion 1	182.1	Negative ESI (CID)
Fragment Ion 2	224.1	Negative ESI (CID)
Fragment Ion 3	238.1	Negative ESI (CID)

Table 2: Comparison of Diagnostic Fragments for NO_2-LA Isomers

© 2026 BenchChem. All rights reserved.

Isomer	Diagnostic Fragment Ions (m/z)
9-NO_2-LA	168.1, 210.1, 224.1
10-NO_2-LA	182.1, 224.1, 238.1
12-NO_2-LA	157.1, 171.1, 195.1, 213.1
13-NO_2-LA	171.1, 185.1, 209.1, 227.1

Experimental Protocols

Liquid Chromatography-Tandem Mass Spectrometry (LC-MS/MS) for 10-NO_2-LA

- Sample Preparation: Extract lipids from the biological matrix using a suitable method, such as a modified Bligh-Dyer or Folch extraction. Dry the lipid extract under a stream of nitrogen and reconstitute in the initial mobile phase.
- Chromatography:
  - Column: C18 reverse-phase column (e.g., 2 x 150 mm, 3 µm particle size).
  - Mobile Phase A: Water + 0.1% Acetic Acid.
  - Mobile Phase B: Acetonitrile + 0.1% Acetic Acid.
  - Gradient: Start with a high percentage of mobile phase A (e.g., 65%) and ramp to a high percentage of mobile phase B over a suitable time to achieve separation (e.g., 45 minutes).[1]
  - Flow Rate: 250 µL/min.[1]
- Mass Spectrometry:
  - Ionization: Electrospray Ionization (ESI) in negative mode.
  - Precursor Ion Selection: Select the $[M-H]^-$ ion of 10-NO_2-LA at m/z 324.3.
  - Collision-Induced Dissociation (CID): Use a collision energy of approximately -35 eV.

© 2026 BenchChem. All rights reserved.

- Product Ion Scanning: Monitor for the characteristic fragment ions of 10-NO_2-LA (m/z 182.1, 224.1, 238.1).

Visualizations

© 2026 BenchChem. All rights reserved.

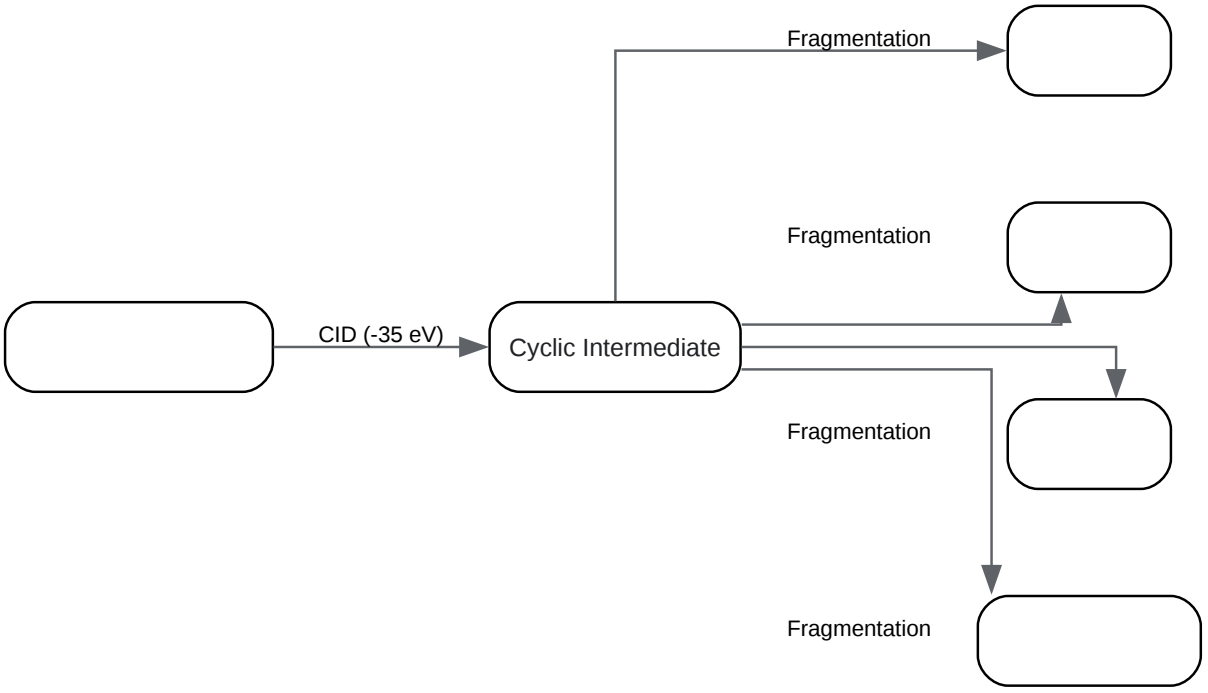

© 2026 BenchChem. All rights reserved.

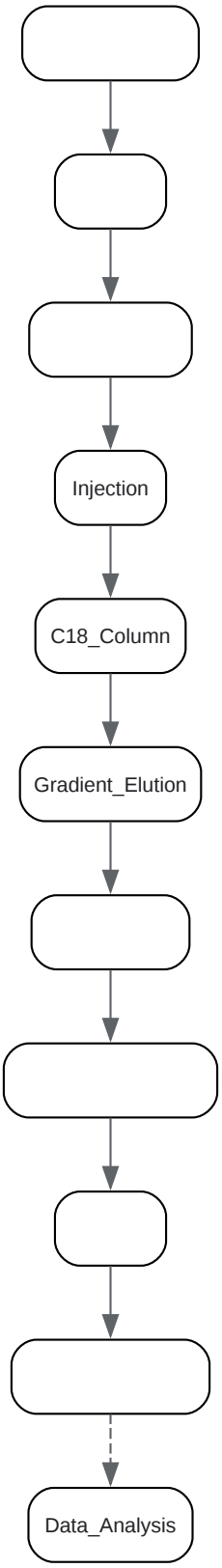

© 2026 BenchChem. All rights reserved.

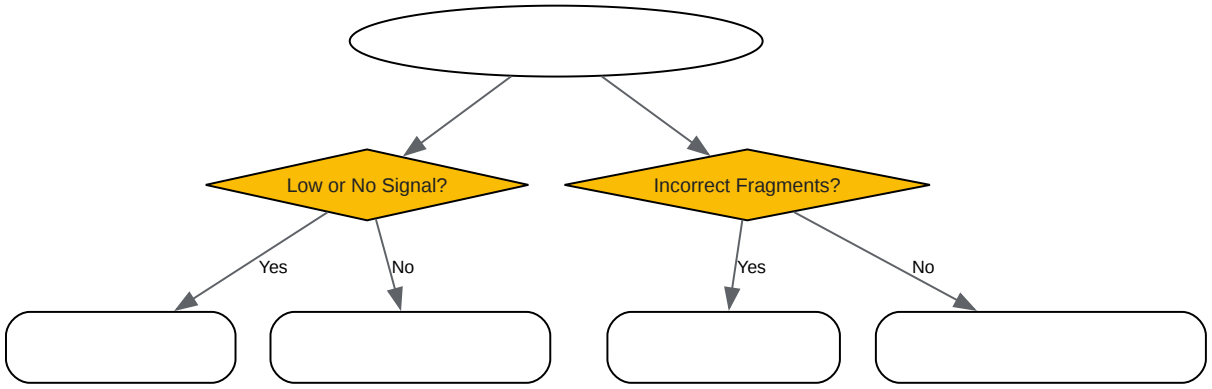

Click to download full resolution via product page

Need Custom Synthesis?

BenchChem offers custom synthesis for rare earth carbides and specific isotopiclabeling.

Email: info@benchchem.com or Request Quote Online.

References

- 1. Gas-Phase Fragmentation Analysis of Nitro-Fatty Acids - PMC [pmc.ncbi.nlm.nih.gov]
- 2. researchgate.net [researchgate.net]
- 3. Discovery of bioactive nitrated lipids and nitro-lipid-protein adducts using mass spectrometry-based approaches - PMC [pmc.ncbi.nlm.nih.gov]
- To cite this document: BenchChem. [Technical Support Center: 10-Nitrolinoleic Acid Mass Spectrometry Fragmentation]. BenchChem, [2026]. [Online PDF]. Available at: [https://www.benchchem.com/product/b122071/docs#technical-support-center-10-nitrolinoleic-acid-mass-spectrometry-fragmentation]

Disclaimer & Data Validity:

The information provided in this document is for Research Use Only (RUO) and is strictly not intended for diagnostic or therapeutic procedures. While BenchChem strives to provide

© 2026 BenchChem. All rights reserved.

accurate protocols, we make no warranties, express or implied, regarding the fitness of this product for every specific experimental setup.

Technical Support: The protocols provided are for reference purposes. Unsure if this reagent suits your experiment?

Need Industrial/Bulk Grade? Request Custom Synthesis Quote

BenchChem

Our mission is to be the trusted global source of essential and advanced chemicals, empowering scientists and researchers to drive progress in science and industry.

Contact

Address: 3281 E Guasti Rd

Ontario, CA 91761, United States

Phone: (601) 213-4426

Email: info@benchchem.com

Contact our Ph.D. Support Team for a compatibility check

© 2026 BenchChem. All rights reserved.