An In-Depth Technical Guide to the Local Anesthetic Effects of Dexpropranolol

Author: BenchChem Technical Support Team. **Date**: May 2026

Compound of Interest

Compound Name:	*Dexpropranolol*
CAS No.:	*5051-22-9*
Cat. No.:	*B1210282*

Get Quote

For Researchers, Scientists, and Drug Development Professionals

Authored by: Gemini, Senior Application Scientist

This guide provides a comprehensive technical overview of the local anesthetic properties of **dexpropranolol**, the dextrorotatory isomer of propranolol. Freed from the constraints of a rigid template, this document is structured to deliver a deep, logical, and scientifically-grounded exploration of **dexpropranolol**'s mechanism of action, its evaluation in preclinical models, and its comparative pharmacological profile. Every claim is substantiated with in-text citations, and detailed experimental protocols are provided to ensure scientific integrity and reproducibility.

Introduction: Beyond Beta-Blockade - Dexpropranolol as a Local Anesthetic

Dexpropranolol, the (R)-(+)-enantiomer of propranolol, is a fascinating molecule primarily known for its virtual lack of beta-adrenergic receptor blocking activity, a stark contrast to its potent beta-blocking S-(-)-enantiomer, espropranolol.[1] However, it shares a distinct pharmacological property with its racemic parent compound: a significant local anesthetic

© 2026 BenchChem. All rights reserved.

effect.[1] This "membrane-stabilizing" activity is independent of its beta-blocking capabilities and positions **dexpropranolol** as a valuable tool for researchers investigating nociception and local anesthesia, as well as a potential therapeutic agent in its own right.

This guide will delve into the core mechanisms underpinning **dexpropranolol**'s local anesthetic action, provide detailed methodologies for its preclinical evaluation, and present a comparative analysis with established local anesthetics.

Core Mechanism of Action: A Tale of Two Targets

The local anesthetic effect of **dexpropranolol** is primarily attributed to its interaction with voltage-gated sodium channels, a mechanism it shares with classic local anesthetics like lidocaine and bupivacaine. However, emerging evidence suggests a secondary mechanism involving calmodulin antagonism, which may contribute to its overall pharmacological profile.

Primary Target: Voltage-Gated Sodium Channel Blockade

The fundamental action of local anesthetics is the reversible blockade of voltage-gated sodium channels (VGSCs) in nerve membranes.[2][3] This blockade prevents the influx of sodium ions necessary for the depolarization of the nerve, thereby inhibiting the generation and propagation of action potentials.

Dexpropranolol, like racemic propranolol, exerts its local anesthetic effect through this mechanism. The blockade of sodium channels by propranolol enantiomers is not stereospecific, meaning that **dexpropranolol** (R-(+)-propranolol) and espropranolol (S-(-)-propranolol) exhibit roughly equal potency in blocking these channels.[4] This is a critical point, as it dissociates the local anesthetic effect from the beta-adrenergic blockade, which is highly stereospecific to the S-(-)-enantiomer.

Key Mechanistic Insights:

- Use-Dependent Block: Propranolol's blockade of sodium channels is use-dependent, meaning it has a higher affinity for channels that are frequently opening and closing, such as those in rapidly firing neurons.[4]

© 2026 BenchChem. All rights reserved.

- Interaction with the Local Anesthetic Binding Site: Studies have shown that mutations in the recognized local anesthetic binding site on the NaV1.5 channel significantly reduce the blocking efficacy of propranolol, suggesting a shared binding domain with traditional local anesthetics.[4]

Diagram of the Primary Mechanism of Action

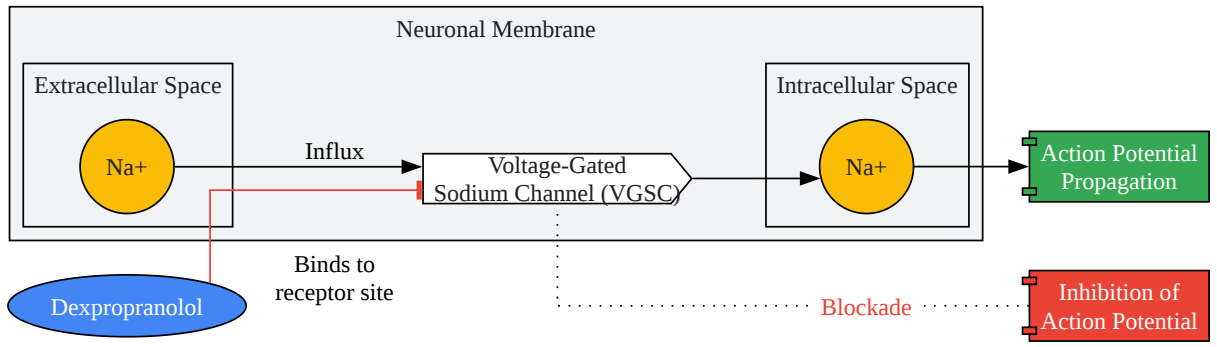

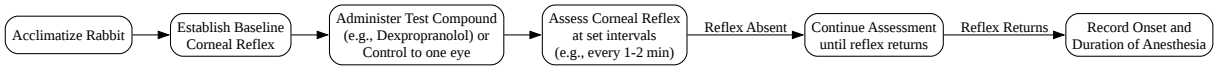

Click to download full resolution via product page

Caption: Workflow for the Rabbit Corneal Reflex Assay.

Detailed Protocol:

- Animal Preparation:
  - Use healthy adult albino rabbits.
  - Acclimatize the animals to the laboratory environment for at least 72 hours prior to the experiment. [5] * Gently restrain the rabbit in a suitable holder.
- Baseline Measurement:

© 2026 BenchChem. All rights reserved.

- Establish a baseline corneal reflex by gently touching the center of the cornea with a fine, soft filament (e.g., a wisp of cotton). A positive response is a distinct blink reflex.
- Perform this baseline measurement on both eyes.

- Drug Administration:
  - Instill a standardized volume (e.g., 2-3 drops) of the test solution (**dexpropranolol** at various concentrations) into the conjunctival sac of one eye.
  - The contralateral eye can serve as a control, receiving a vehicle solution.
- Assessment of Anesthesia:
  - Onset of Action: At regular intervals (e.g., every minute), gently touch the cornea with the filament and record the presence or absence of the blink reflex. The time to the first absence of the reflex is the onset of anesthesia.
  - Duration of Action: Continue to test the corneal reflex at regular intervals (e.g., every 5-10 minutes) until the blink reflex returns to baseline. The time from the onset of anesthesia to the return of the reflex is the duration of action.
- Data Analysis:
  - Compare the onset and duration of anesthesia for different concentrations of **dexpropranolol** and against positive controls like lidocaine or bupivacaine.

Mouse Vocalization Assay (Infiltration Anesthesia)

This model quantifies the degree of local anesthesia by measuring the threshold of an animal's vocalization response to a noxious electrical stimulus.

[6]Experimental Workflow

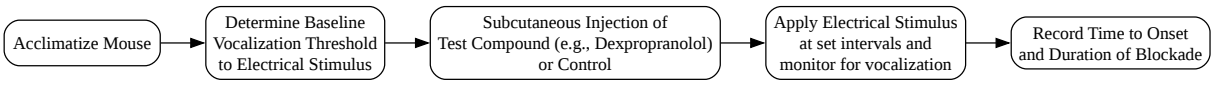

© 2026 BenchChem. All rights reserved.

Click to download full resolution via product page

Caption: Workflow for the Mouse Vocalization Assay.

Detailed Protocol:

- Animal Preparation:
  - Use adult male or female mice.
  - Acclimatize the animals to handling and the experimental setup for several days prior to testing.

[7]2. Baseline Threshold Determination:

- Place the mouse in a restraining device.
- Apply a gradually increasing electrical stimulus to a specific skin area (e.g., the abdomen or tail base) using fine needle electrodes.
- The current at which the mouse first vocalizes is recorded as the baseline vocalization threshold.

- Drug Administration:
  - Administer a subcutaneous injection of a standardized volume of the test solution (**dexpropranolol** at various concentrations) into the area where the electrical stimulus will be applied.
  - Include vehicle control and positive control (e.g., lidocaine) groups.

- Assessment of Anesthesia:
  - Onset of Action: At regular intervals post-injection (e.g., every 1-2 minutes), apply the pre-determined electrical stimulus and note the presence or absence of a vocalization response. The time to the first absence of vocalization is the onset of anesthesia.
  - Duration of Action: Continue to test for vocalization at regular intervals (e.g., every 5-10 minutes). The time until the vocalization response returns is the duration of the anesthetic block.

© 2026 BenchChem. All rights reserved.

- Data Analysis:
  - Calculate the percentage of animals exhibiting anesthesia at each time point for each treatment group.
  - Determine the ED50 for **dexpropranolol** and compare its potency and duration of action to other local anesthetics.

Intradermal Wheal Assay (Infiltration Anesthesia)

This classic method assesses local anesthetic activity by measuring the suppression of the cutaneous pain response to a mechanical stimulus within an intradermally injected wheal.

Detailed Protocol:

- Animal Preparation:
  - Use guinea pigs or rabbits.
  - Carefully clip the hair on the animal's back to create a clear area for injection and testing.
- Intradermal Injection:
  - Inject a small, standardized volume (e.g., 0.1-0.25 mL) of the test solution intradermally to form a distinct wheal (a raised, blanched area of skin).
  - Create multiple wheals for different concentrations of **dexpropranolol**, a vehicle control, and a positive control.
- Assessment of Anesthesia:
  - At set time intervals after injection, apply a mechanical stimulus (e.g., a sharp pinprick) to the center of the wheal.
  - The absence of a skin twitch or flinch response is indicative of local anesthesia.
  - Record the number of stimuli that fail to elicit a response out of a set number of applications (e.g., 6 pricks).

© 2026 BenchChem. All rights reserved.

- Data Analysis:
  - The duration of anesthesia is the time from injection until the animal consistently responds to the stimulus.
  - Compare the duration and intensity of the anesthetic effect across different treatment groups.

Comparative Pharmacology: **Dexpropranolol** vs. Standard Local Anesthetics

Understanding the pharmacological profile of **dexpropranolol** in relation to established local anesthetics is crucial for its potential development and application.

Parameter	Dexpropranolol (inferred from Propranolol)	Lidocaine	Bupivacaine
Potency	High (~2.5x Lidocaine)	[8] Intermediate	High
Onset of Action	Likely Intermediate to Slow	Fast	[3] Slow
Duration of Action	Long	[8] Intermediate	[9] Long
Primary Mechanism	VGSC Blockade	VGSC Blockade	VGSC Blockade
Secondary Mechanism	Calmodulin Antagonism	[1] -	-
Protein Binding	High	Intermediate (~65%)	[9] High (~95%)
Lipid Solubility	High	Intermediate	High

Causality Behind Pharmacokinetic Properties:

- Potency and Lipid Solubility: The high lipid solubility of propranolol contributes to its high potency, as it allows for greater penetration of the nerve membrane to reach the intracellular

© 2026 BenchChem. All rights reserved.

binding site on the sodium channel. *[2][3] Duration of Action and Protein Binding: The long duration of action is likely due to high protein binding, which creates a local reservoir of the drug at the site of action, and high lipid solubility, which can lead to sequestration in surrounding tissues. *[9] Onset of Action and pKa: The onset of action of local anesthetics is influenced by their pKa. While the specific pKa of **dexpropranolol** is the same as propranolol (around 9.5), its high lipid solubility may also influence its partitioning into the nerve membrane, affecting the onset.

Conclusion and Future Directions

Dexpropranolol presents a compelling profile as a local anesthetic, characterized by high potency and a long duration of action, mediated primarily through the blockade of voltage-gated sodium channels. Its negligible beta-blocking activity makes it a clean pharmacological tool for studying local anesthesia without the confounding cardiovascular effects of racemic propranolol.

Future research should focus on:

- Determining the IC50 of **dexpropranolol** on a wider range of neuronal sodium channel subtypes to better understand its selectivity profile.
- Conducting head-to-head in vivo studies directly comparing the onset, duration, and potency of **dexpropranolol** with standard local anesthetics like lidocaine and bupivacaine across multiple models.
- Investigating the clinical utility of **dexpropranolol** as a long-acting local anesthetic, potentially in formulations designed for sustained release.
- Further elucidating the role of calmodulin antagonism in the overall pharmacological effects of **dexpropranolol**.

This in-depth guide provides a solid foundation for researchers and drug development professionals to understand and explore the local anesthetic potential of **dexpropranolol**. The provided protocols and comparative data serve as a valuable resource for designing and interpreting future studies in this promising area of pharmacology.

© 2026 BenchChem. All rights reserved.

References

- Nakamura, T., Oda, Y., Takahashi, R., Tanaka, K., Hase, I., & Asada, A. (2008). Propranolol increases the threshold for lidocaine-induced convulsions in awake rats: a direct effect on the brain. Anesthesia & Analgesia, 106(5), 1450-1455. [Link]
- Deranged Physiology. (2024). Pharmacology of local anaesthetics. Retrieved from [Link]
- DiFazio, C. A., & Woods, A. M. (n.d.). 34A Pharmacology of Local Anesthetics. Retrieved from [Link]
- Becker, D. E., & Reed, K. L. (2012). Local Anesthetics: Review of Pharmacological Considerations. Anesthesia Progress, 59(2), 90-102. [Link]
- Bankston, J. R., & Kass, R. S. (2010). Molecular determinants of local anesthetic action of beta-blocking drugs: Implications for therapeutic management of long QT syndrome variant 3. Heart Rhythm, 7(11), 1667-1674. [Link]
- Strichartz, G. R., & Covino, B. G. (Eds.). (1993). Local Anesthetics. Springer Science & Business Media.
- Pineda-Farias, J. B., Barragán-Iglesias, P., & Granados-Soto, V. (2012). Mouse current vocalization threshold measured with a neurospecific nociception assay: The effect of sex, morphine, and isoflurane. Journal of Neuroscience Methods, 209(2), 359-365. [Link]
- Bowdle, T. A., Freund, P. R., & Slattery, J. T. (1987). Propranolol reduces bupivacaine clearance. Anesthesiology, 66(1), 36-38. [Link]
- McGill University. (2020). GUINEA PIG ANESTHESIA. Retrieved from [Link]
- Shoshan-Barmatz, V., & Ashley, R. H. (1988). ATP-dependent interaction of propranolol and local anaesthetic with sarcoplasmic reticulum. Stimulation of Ca2+ efflux. Biochemical Journal, 256(3), 733-739. [Link]
- Lee, I. O., & Kim, W. M. (2012). Propranolol elicits cutaneous analgesia against skin nociceptive stimuli in rats. Neuroscience Letters, 524(2), 111-114. [Link]

© 2026 BenchChem. All rights reserved.

- Rabbit Welfare Association & Fund. (n.d.). Rabbit General Anaesthesia - Step by Step. Retrieved from [Link]
- Hankenson, F. C., Vaness, P. J., & K-M, W. (2012). Behavioral and Activity Assessment of Laboratory Mice (Mus musculus) after Tail Biopsy under Isoflurane Anesthesia. Journal of the American Association for Laboratory Animal Science, 51(4), 460-466. [Link]
- Research A-Z. (n.d.). Guidelines on Anesthesia and Analgesia in Guinea Pigs. Retrieved from [Link]
- The Veterinary Nurse. (2024). The fundamentals of anaesthetic monitoring in rabbits – a guide for veterinary nurses. Retrieved from [Link]
- Telfer, J. A., & Vitzthum, V. J. (2023). A Review of the Lidocaine in the Perioperative Period. Medicina, 59(12), 2167. [Link]
- McGill University. (2021). RABBIT ANESTHESIA. Retrieved from [Link]
- Wang, Y., Zhang, Y., Liu, C., Zhang, Y., Zhang, Z., & Wang, K. (2023). Transcutaneous Auricular Vagus Nerve Stimulation Alleviates Headache Symptoms in Migraine Model Mice by the Locus Coeruleus/Noradrenergic System: An Experimental Study in a Mouse Model of Migraine. Journal of Pain Research, 16, 3379-3392. [Link]
- Thompson, A. C., & Ata, A. (2022). A Comparison of Three Anesthetic Drug Combinations for Use in Inducing Surgical Anesthesia in Female Guinea Pigs (Cavia porcellus). Journal of the American Association for Laboratory Animal Science, 61(5), 496-503. [Link]
- Sterling, L., Stahl, O., & Grinevich, V. (2023). Rodent ultrasonic vocal interaction resolved with millimeter precision using hybrid beamforming. eLife, 12, e86126. [Link]
- Hadzic, A., & Vloka, J. D. (Eds.). (2025). Comparative Methods to Predict Redosing of Bupivacaine and Ropivacaine in Truncal Catheters. Anesthesiology. [Link]
- Hazra, S., Palui, H., & Biswas, B. (2011). Anesthesia for Intraocular Surgery in Rabbits. Scandinavian Journal of Laboratory Animal Science, 38(2), 109-114. [Link]
- Research Toxicology Centre. (n.d.). ChemView. Retrieved from [Link]

© 2026 BenchChem. All rights reserved.

- Kim, J. H., & Park, S. J. (2019). Appropriate method for intradermal injection in the guinea pig. Laboratory Animal Research, 35, 1. [Link]

Need Custom Synthesis?

BenchChem offers custom synthesis for rare earth carbides and specific isotopiclabeling.

Email: info@benchchem.com or Request Quote Online.

Sources

- 1. ATP-dependent interaction of propranolol and local anaesthetic with sarcoplasmic reticulum. Stimulation of Ca2+ efflux - PubMed [pubmed.ncbi.nlm.nih.gov]
- 2. derangedphysiology.com [derangedphysiology.com]
- 3. Basic pharmacology of local anaesthetics - PMC [pmc.ncbi.nlm.nih.gov]
- 4. Molecular determinants of local anesthetic action of beta-blocking drugs: Implications for therapeutic management of long QT syndrome variant 3 - PMC [pmc.ncbi.nlm.nih.gov]
- 5. az.research.umich.edu [az.research.umich.edu]
- 6. Mouse current vocalization threshold measured with a neurospecific nociception assay: The effect of sex, morphine, and isoflurane - PMC [pmc.ncbi.nlm.nih.gov]
- 7. az.research.umich.edu [az.research.umich.edu]
- 8. Propranolol elicits cutaneous analgesia against skin nociceptive stimuli in rats - PubMed [pubmed.ncbi.nlm.nih.gov]
- 9. anesthesiologie.umontreal.ca [anesthesiologie.umontreal.ca]
- To cite this document: BenchChem. [An In-Depth Technical Guide to the Local Anesthetic Effects of Dexpropranolol]. BenchChem, [2026]. [Online PDF]. Available at: [https://www.benchchem.com/product/b1210282/docs#an-in-depth-technical-guide-to-the-local-anesthetic-effects-of-dexpropranolol]

Disclaimer & Data Validity:

The information provided in this document is for Research Use Only (RUO) and is strictly not intended for diagnostic or therapeutic procedures. While BenchChem strives to provide

accurate protocols, we make no warranties, express or implied, regarding the fitness of this product for every specific experimental setup.

Technical Support: The protocols provided are for reference purposes. Unsure if this reagent suits your experiment?

Need Industrial/Bulk Grade? Request Custom Synthesis Quote

BenchChem

Our mission is to be the trusted global source of essential and advanced chemicals, empowering scientists and researchers to drive progress in science and industry.

Contact

Address: 3281 E Guasti Rd

Ontario, CA 91761, United States

Phone: (601) 213-4426

Email: info@benchchem.com

Contact our Ph.D. Support Team for a compatibility check

© 2026 BenchChem. All rights reserved.