Application of 6-Dimethylaminonicotinamide in Neurodegeneration Research: A Technical Guide

Author: BenchChem Technical Support Team. **Date**: May 2026

Compound of Interest

Compound Name:	*6-Dimethylaminonicotinamide*
CAS No.:	*36507-21-8*
Cat. No.:	*B1208849*

Get Quote

For Researchers, Scientists, and Drug Development Professionals

Introduction: The Emerging Role of 6-Dimethylaminonicotinamide in Neuroprotection

Neurodegenerative diseases, including Alzheimer's, Parkinson's, and amyotrophic lateral sclerosis (ALS), represent a significant and growing global health challenge. A common pathological feature across these disorders is the progressive loss of neuronal structure and function, often driven by mechanisms such as oxidative stress, neuroinflammation, and programmed cell death. In the quest for therapeutic interventions, molecules that can modulate these key pathways are of paramount interest. **6-Dimethylaminonicotinamide** (6-DMAN), a derivative of nicotinamide (a form of vitamin B3), is emerging as a promising small molecule for neurodegeneration research. Its structural similarity to nicotinamide suggests a role as an inhibitor of Poly(ADP-ribose) polymerase-1 (PARP-1), a key enzyme implicated in neuronal death pathways.

This technical guide provides a comprehensive overview of the application of 6-DMAN in neurodegeneration research. It is designed to equip researchers with the foundational

© 2026 BenchChem. All rights reserved.

knowledge and practical protocols to investigate the neuroprotective potential of this compound. We will delve into its presumed mechanism of action, provide detailed methodologies for in vitro and in vivo studies, and offer insights into the critical experimental considerations for obtaining robust and reproducible data.

The Central Mechanism: PARP-1 Inhibition and the Preservation of Neuronal Integrity

The neuroprotective effects of 6-DMAN are hypothesized to stem from its activity as a PARP-1 inhibitor. PARP-1 is a nuclear enzyme that plays a critical role in DNA repair. However, under conditions of excessive DNA damage, as seen in neurodegenerative states, hyperactivation of PARP-1 can lead to a form of programmed cell death known as parthanatos.[1] This deleterious cascade is primarily driven by the depletion of cellular nicotinamide adenine dinucleotide (NAD+), a crucial coenzyme for energy metabolism and a substrate for PARP-1.

By inhibiting PARP-1, 6-DMAN is expected to:

- Preserve Cellular NAD+ Levels: Preventing the excessive consumption of NAD+ by hyperactivated PARP-1, thereby maintaining cellular energy homeostasis and mitochondrial function.[2][3]
- Reduce Neuroinflammation: PARP-1 activation is linked to the expression of pro-inflammatory cytokines in the brain. Inhibition of PARP-1 can attenuate this inflammatory response, which is a key contributor to neurodegeneration.[1][4]
- Prevent Parthanatos: By blocking the downstream signaling cascade of PARP-1 hyperactivation, 6-DMAN can directly inhibit this specific pathway of neuronal cell death.

The following diagram illustrates the proposed mechanism of action for 6-DMAN in a neurodegenerative context.

© 2026 BenchChem. All rights reserved.

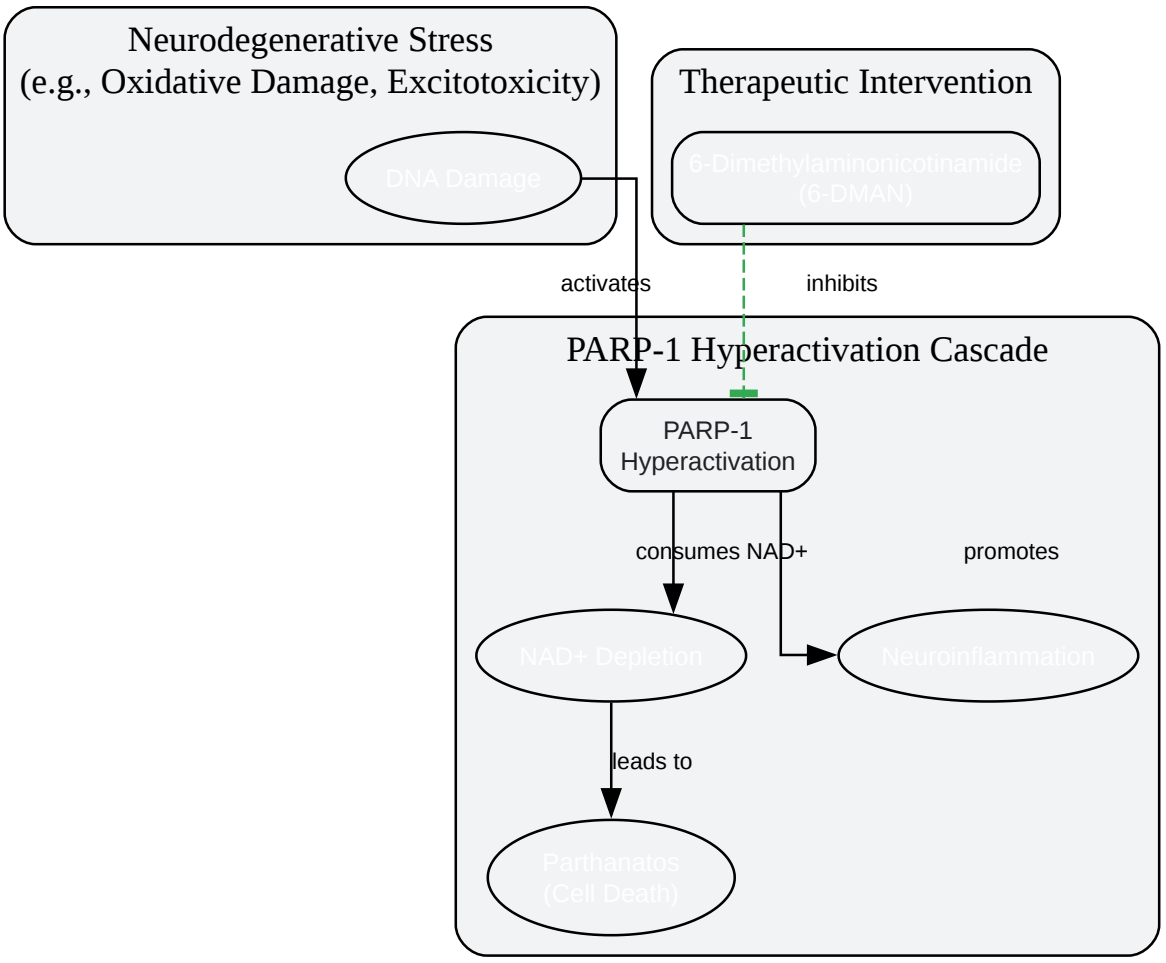

Click to download full resolution via product page

Caption: Proposed mechanism of 6-DMAN in neuroprotection.

In Vitro Applications: Investigating Neuroprotection in Cellular Models

Cell-based assays are the cornerstone for the initial characterization of a neuroprotective compound. The human neuroblastoma cell line SH-SY5Y is a widely used and relevant model for neurodegenerative disease research due to its neuronal characteristics upon differentiation.

General Cell Culture and Differentiation Protocol for SH-SY5Y Cells

© 2026 BenchChem. All rights reserved.

Materials:

- SH-SY5Y human neuroblastoma cell line
- Dulbecco's Modified Eagle Medium (DMEM)/F-12 (1:1)
- Fetal Bovine Serum (FBS)
- Penicillin-Streptomycin solution
- Retinoic Acid (RA)
- Brain-Derived Neurotrophic Factor (BDNF) (optional)
- Trypsin-EDTA
- Phosphate-Buffered Saline (PBS)

Procedure:

- Maintenance of Undifferentiated Cells: Culture SH-SY5Y cells in DMEM/F-12 supplemented with 10% FBS and 1% Penicillin-Streptomycin at 37°C in a humidified atmosphere of 5% CO2.
- Passaging: When cells reach 80-90% confluency, aspirate the medium, wash with PBS, and detach the cells using Trypsin-EDTA. Neutralize trypsin with complete medium and centrifuge. Resuspend the cell pellet in fresh medium and seed into new flasks at a 1:5 to 1:10 ratio.
- Neuronal Differentiation: To induce a more mature neuronal phenotype, seed cells at a lower density. The following day, replace the growth medium with differentiation medium containing DMEM/F-12 with 1% FBS, 1% Penicillin-Streptomycin, and 10 µM Retinoic Acid.
- Maturation (Optional): After 5-7 days of RA treatment, the medium can be further replaced with a serum-free medium containing BDNF (50 ng/mL) for an additional 2-3 days to promote the maturation of differentiated neurons.

© 2026 BenchChem. All rights reserved.

Protocol for Assessing Neuroprotection of 6-DMAN against 6-OHDA-Induced Toxicity

This protocol details a typical experiment to evaluate the protective effects of 6-DMAN in a well-established in vitro model of Parkinson's disease using the neurotoxin 6-hydroxydopamine (6-OHDA).

Materials:

- Differentiated SH-SY5Y cells in 96-well plates
- **6-Dimethylaminonicotinamide** (6-DMAN) stock solution (dissolved in sterile water or DMSO)
- 6-Hydroxydopamine (6-OHDA) hydrobromide (dissolved fresh in sterile water with 0.02% ascorbic acid)
- Cell viability assay reagent (e.g., MTT, PrestoBlue™, or similar)
- Apoptosis/necrosis detection kit (e.g., Annexin V/Propidium Iodide)
- Microplate reader
- Fluorescence microscope or flow cytometer

Experimental Workflow:

© 2026 BenchChem. All rights reserved.

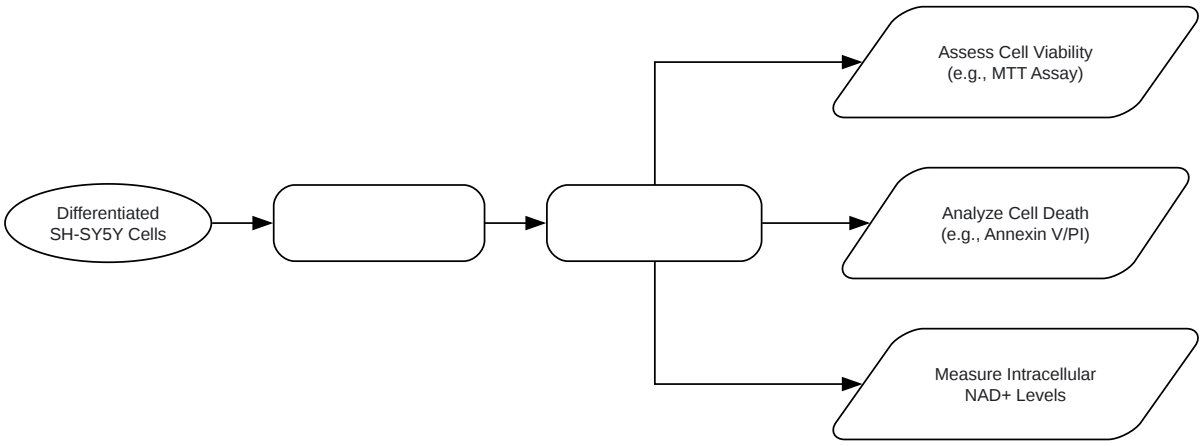

Click to download full resolution via product page

Caption: In vitro experimental workflow for assessing 6-DMAN neuroprotection.

Step-by-Step Protocol:

- Cell Seeding: Seed differentiated SH-SY5Y cells into 96-well plates at an appropriate density to ensure they are approximately 70-80% confluent at the time of the experiment.
- 6-DMAN Pre-treatment: Prepare serial dilutions of 6-DMAN in the differentiation medium. It is recommended to start with a broad concentration range (e.g., 1 µM to 1 mM) to determine the optimal protective concentration. Replace the existing medium with the 6-DMAN-containing medium and incubate for 2-4 hours. Include a vehicle control (medium with the same concentration of DMSO or water as the highest 6-DMAN concentration).
- Induction of Neurotoxicity: Prepare a fresh solution of 6-OHDA in differentiation medium. Add 6-OHDA to the wells to a final concentration that induces approximately 50% cell death (typically 50-100 µM for SH-SY5Y cells, to be determined empirically).[5] Include a control group of cells not exposed to 6-OHDA.
- Incubation: Incubate the plates for 24 hours at 37°C.

© 2026 BenchChem. All rights reserved.

- Assessment of Cell Viability:
  - Add the cell viability reagent (e.g., MTT) to each well according to the manufacturer's instructions.
  - Incubate for the recommended time.
  - Read the absorbance or fluorescence on a microplate reader.
  - Calculate cell viability as a percentage relative to the untreated control cells.
- Analysis of Cell Death Mechanism (Optional but Recommended):
  - For a more detailed analysis, use an Annexin V/Propidium Iodide staining kit.
  - After the 24-hour incubation, collect the cells and stain them according to the manufacturer's protocol.
  - Analyze the stained cells using a fluorescence microscope or flow cytometer to differentiate between viable, apoptotic, and necrotic cells.
- Measurement of Intracellular NAD+ Levels (Mechanistic Insight):
  - Several commercially available kits can be used to measure intracellular NAD+ levels.
  - At the end of the treatment period, lyse the cells and perform the NAD+ assay according to the kit's instructions.
  - This will help to directly test the hypothesis that 6-DMAN preserves NAD+ levels.

Expected Outcomes and Data Interpretation

A successful neuroprotective effect of 6-DMAN would be demonstrated by a significant increase in cell viability in the 6-DMAN pre-treated groups exposed to 6-OHDA, compared to the group treated with 6-OHDA alone. A dose-dependent protective effect is often observed. The Annexin V/PI staining should reveal a decrease in the percentage of apoptotic and necrotic cells with 6-DMAN treatment. Furthermore, a mechanistic link can be established if 6-DMAN treatment is shown to attenuate the 6-OHDA-induced depletion of intracellular NAD+.

© 2026 BenchChem. All rights reserved.

Parameter	Control	6-OHDA	6-OHDA + 6-DMAN (Low Conc.)	6-OHDA + 6-DMAN (High Conc.)
Cell Viability (%)	100	~50	>50	Approaching 100
Apoptotic Cells (%)	<5	>30	<30	Approaching baseline
Intracellular NAD+ (%)	100	<50	>50	Approaching 100

Table 1: Hypothetical data demonstrating the neuroprotective effects of 6-DMAN in an in vitro 6-OHDA model.Actual values need to be determined experimentally.

In Vivo Applications: Evaluating Therapeutic Efficacy in Animal Models

Animal models are indispensable for evaluating the therapeutic potential of a compound in a complex biological system. The 6-OHDA-induced rat or mouse model of Parkinson's disease is a widely accepted preclinical model.[6]

Protocol for a Unilateral 6-OHDA Lesion Model in Rats and 6-DMAN Treatment

Materials:

- Adult male Sprague-Dawley rats (250-300g)

© 2026 BenchChem. All rights reserved.

- Stereotaxic apparatus
- Anesthesia (e.g., isoflurane)
- 6-Hydroxydopamine (6-OHDA)
- Desipramine (to protect noradrenergic neurons)
- **6-Dimethylaminonicotinamide** (6-DMAN)
- Vehicle for 6-DMAN administration (e.g., saline, DMSO/saline mixture)
- Apomorphine or amphetamine for behavioral testing

Experimental Workflow:

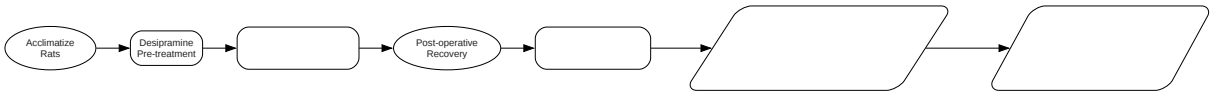

Click to download full resolution via product page

Caption: In vivo experimental workflow for assessing 6-DMAN in a Parkinson's disease model.

Step-by-Step Protocol:

- Acclimatization: House the rats in a controlled environment for at least one week before the experiment.
- Desipramine Pre-treatment: Approximately 30 minutes before 6-OHDA injection, administer desipramine (25 mg/kg, i.p.) to protect noradrenergic neurons from the toxin.
- Stereotaxic Surgery for 6-OHDA Lesion:
  - Anesthetize the rat and place it in the stereotaxic frame.

© 2026 BenchChem. All rights reserved.

- Inject 6-OHDA (e.g., 8 µg in 4 µL of saline with 0.02% ascorbic acid) unilaterally into the medial forebrain bundle. The injection should be performed slowly over several minutes.
- Leave the injection needle in place for an additional 5 minutes to allow for diffusion before slowly retracting it.
- Suture the incision and allow the animal to recover.

- 6-DMAN Administration:
  - Begin 6-DMAN treatment on the day of or the day after surgery. Based on studies with related compounds, a starting dose could be in the range of 10-50 mg/kg, administered daily via intraperitoneal (i.p.) injection.[2][7] A vehicle-treated group should be included.
  - Continue treatment for the duration of the study (e.g., 2-4 weeks).
- Behavioral Assessment:
  - At 2-3 weeks post-lesion, assess the extent of the dopaminergic lesion by challenging the rats with apomorphine (0.5 mg/kg, s.c.) or amphetamine (5 mg/kg, i.p.).
  - Record the number of contralateral (for apomorphine) or ipsilateral (for amphetamine) rotations over a period of 60-90 minutes. A successful lesion will induce a robust rotational behavior.
  - A neuroprotective effect of 6-DMAN would be indicated by a significant reduction in the number of rotations compared to the vehicle-treated group.
- Histological Analysis:
  - At the end of the study, perfuse the animals and collect the brains.
  - Process the brain tissue for immunohistochemical staining for Tyrosine Hydroxylase (TH), a marker for dopaminergic neurons.
  - Quantify the number of TH-positive cells in the substantia nigra pars compacta on both the lesioned and unlesioned sides.

© 2026 BenchChem. All rights reserved.

- A neuroprotective effect of 6-DMAN would be demonstrated by a significant preservation of TH-positive neurons in the substantia nigra of the lesioned hemisphere compared to the vehicle-treated group.

Conclusion and Future Directions

6-Dimethylaminonicotinamide holds considerable promise as a research tool and potential therapeutic lead for neurodegenerative diseases. Its presumed mechanism as a PARP-1 inhibitor places it at the intersection of several key pathological pathways. The protocols outlined in this guide provide a solid framework for initiating investigations into the neuroprotective properties of 6-DMAN.

It is crucial to emphasize that the provided concentrations and dosages are starting points based on related compounds and established models. Rigorous dose-response studies are essential to determine the optimal therapeutic window for 6-DMAN. Future research should also aim to confirm its PARP-1 inhibitory activity and IC50 value, investigate its pharmacokinetic profile, and explore its efficacy in other models of neurodegeneration, such as those for Alzheimer's disease. Through systematic and well-designed studies, the scientific community can fully elucidate the potential of **6-Dimethylaminonicotinamide** in the fight against neurodegenerative disorders.

References

- Mercanti, G., Bazzu, G., & Giusti, P. (2012). A 6-hydroxydopamine in vivo model of Parkinson's disease. Methods in molecular biology (Clifton, N.J.), 846, 355–364. [Link]
- An, H., Kumar, R., & An, C. (Year). Dopaminergic Neurotoxicant 6-OHDA Induces Oxidative Damage through Proteolytic Activation of PKCδ in Cell Culture and Animal Models of Parkinson's Disease. Source. [Link]
- Challa, S. (2023). THU547 Role Of NAD+ Synthesis Pathway In PARP Inhibitor Resistance. Journal of the Endocrine Society, 7(Supplement_1), A895–A896. [Link]
- Kim, J. H., et al. (2022). PPARδ Activation Mitigates 6-OHDA-Induced Neuronal Damage by Regulating Intracellular Iron Levels. Cells, 11(8), 1369. [Link]

© 2026 BenchChem. All rights reserved.

- Mito, S., et al. (2023). SAR study of niclosamide derivatives for neuroprotective function in SH-SY5Y neuroblastoma. Bioorganic & medicinal chemistry letters, 96, 129505. [Link]
- Nicotinamide, a Poly [ADP-Ribose] Polymerase 1 (PARP-1) Inhibitor, as an Adjunctive Therapy for the Treatment of Alzheimer's Disease. (2020). Frontiers in Aging Neuroscience. [Link]
- Penberthy, W. T., & Tsunoda, I. (2009). The importance of NAD in multiple sclerosis. Current pharmaceutical design, 15(1), 64–99. [Link]
- Sethi, J. K., & Hotamisligil, G. S. (2021). Metabolic Messengers: tumour necrosis factor-α. Nature metabolism, 3(10), 1302–1312. [Link]
- Riljak, V., et al. (2013). Nicotinamide promotes neuronal differentiation of mouse embryonic stem cells in vitro. Development, growth & differentiation, 55(9), 746–753. [Link]
- Liu, D., et al. (2009). Nicotinamide prevents NAD+ depletion and protects neurons against excitotoxicity and cerebral ischemia. Journal of neurochemistry, 108(5), 1159–1171. [Link]

Need Custom Synthesis?

BenchChem offers custom synthesis for rare earth carbides and specific isotopiclabeling.

Email: info@benchchem.com or Request Quote Online.

Sources

- 1. Protocol for quantifying PARP inhibitor-induced changes in PARP1 dynamics and activity through live-cell imaging - PMC [pmc.ncbi.nlm.nih.gov]
- 2. 6-Aminonicotinamide selectively causes necrosis in reactive astroglia cells in vivo. Preliminary morphological observations - PubMed [pubmed.ncbi.nlm.nih.gov]
- 3. diabetesjournals.org [diabetesjournals.org]
- 4. PPARδ Activation Mitigates 6-OHDA-Induced Neuronal Damage by Regulating Intracellular Iron Levels - PMC [pmc.ncbi.nlm.nih.gov]
- 5. Dopaminergic Neurotoxicant 6-OHDA Induces Oxidative Damage through Proteolytic Activation of PKCδ in Cell Culture and Animal Models of Parkinson’s Disease - PMC

© 2026 BenchChem. All rights reserved.

[pmc.ncbi.nlm.nih.gov]

- 6. Neuroprotective Effects of Neuropeptide Y on Human Neuroblastoma SH-SY5Y Cells in Glutamate Excitotoxicity and ER Stress Conditions - PubMed [pubmed.ncbi.nlm.nih.gov]
- 7. The pharmacokinetics of nicotinamide in humans and rodents - PubMed [pubmed.ncbi.nlm.nih.gov]
- To cite this document: BenchChem. [Application of 6-Dimethylaminonicotinamide in Neurodegeneration Research: A Technical Guide]. BenchChem, [2026]. [Online PDF]. Available at: [https://www.benchchem.com/product/b1208849/docs#application-of-6-dimethylaminonicotinamide-in-neurodegeneration-research-a-technical-guide]

Disclaimer & Data Validity:

The information provided in this document is for Research Use Only (RUO) and is strictly not intended for diagnostic or therapeutic procedures. While BenchChem strives to provide accurate protocols, we make no warranties, express or implied, regarding the fitness of this product for every specific experimental setup.

Technical Support: The protocols provided are for reference purposes. Unsure if this reagent suits your experiment?

Need Industrial/Bulk Grade? Request Custom Synthesis Quote

BenchChem

Our mission is to be the trusted global source of essential and advanced chemicals, empowering scientists and researchers to drive progress in science and industry.

Contact

Address: 3281 E Guasti Rd

Ontario, CA 91761, United States

Phone: (601) 213-4426

Email: info@benchchem.com

Contact our Ph.D. Support Team for a compatibility check

© 2026 BenchChem. All rights reserved.