Technical Support Center: Advanced Protection Strategies for Beta-D-Xylopyranoside

Author: BenchChem Technical Support Team. **Date**: April 2026

Compound of Interest

Compound Name:	*Methyl3,4-Di-O-acetyl-beta-D-xylopyranoside*
Cat. No.:	*B12066779*

Get Quote

Current Status: Operational Subject Matter Expert: Senior Application Scientist, Carbohydrate Chemistry Division Topic: Alternative Protecting Groups & Regioselective Strategies

Core Directive & Mission

The Challenge: Unlike glucose or galactose, xylose lacks a primary C6 hydroxyl group. This structural "deficiency" removes the primary anchor point for steric differentiation, making the regioselective protection of the three secondary hydroxyls (C2, C3, C4)—all equatorial in the stable

conformation—exceptionally difficult. Furthermore, maintaining the beta-anomeric configuration requires careful management of the C2-substituent to leverage (or avoid) Neighboring Group Participation (NGP).

Our Mission: This guide provides validated "alternative" protocols (beyond standard Acetyl/Benzyl) to achieve orthogonal protection, high regioselectivity, and glycosylation efficiency.

Decision Matrix: Selecting the Right Strategy

© 2026 BenchChem. All rights reserved.

Before starting, determine your target hydroxyl and required orthogonality. Use the logic flow below to select your method.

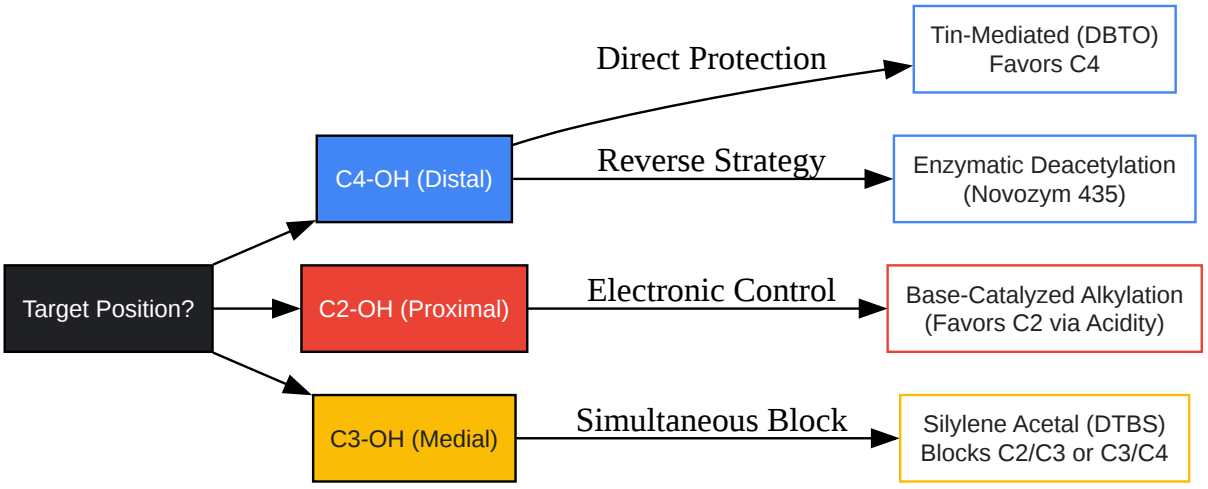

Click to download full resolution via product page

Figure 1: Strategic decision tree for regioselective protection of beta-D-xylopyranoside.

Module 1: Regioselective Installation Protocols

Protocol A: The "C4-First" Strategy (Tin-Mediated)

Why it works: Dibutyltin oxide (DBTO) forms a stannylene acetal intermediate. While typically used for cis-1,2-diols, in the all-equatorial xylose system, it forms a polymeric network that is most easily disrupted at the sterically least hindered position—C4 (due to the absence of C6).

Reagents:

- Dibutyltin oxide (DBTO)
- Electrophile: Benzyl bromide (BnBr) or Benzoyl chloride (BzCl)
- Solvent: Toluene (for azeotrope) or Methanol (initial step)

Step-by-Step:

- Formation: Suspend methyl

© 2026 BenchChem. All rights reserved.

-D-xylopyranoside (1.0 eq) and DBTO (1.1 eq) in anhydrous methanol. Reflux for 2h until the solution is clear (formation of stannylene acetal).

- Solvent Swap: Evaporate methanol. Add anhydrous toluene and evaporate twice to remove trace water (azeotropic drying).
- Reaction: Resuspend in toluene. Add Tetrabutylammonium bromide (TBAB, 0.1 eq) as a nucleophilic catalyst.
- Addition: Add the electrophile (e.g., BnBr, 1.1 eq) dropwise. Heat to 80°C.
- Result: Preferential substitution at C4 (Yields typically 60-75%).
  - Note: Minor C2 products may form; these are easily separable by chromatography.

Protocol B: The "Enzymatic Eraser" (C4-Selective Deprotection)

Why it works:Candida antarctica Lipase B (CAL-B, Novozym 435) displays remarkable specificity for the C4 ester in peracetylated xylosides due to the unique spatial fit in the enzyme's active site.

Step-by-Step:

- Start with peracetylated methyl

  -D-xylopyranoside.
- Dissolve in a mixture of Phosphate Buffer (pH 7) and Acetonitrile (9:1 v/v).
- Add Novozym 435 beads (50% w/w relative to substrate).
- Incubate at 30°C with orbital shaking.
- Result: Clean hydrolysis of the C4-OAc group, yielding the 2,3-di-O-acetyl acceptor.

Module 2: Orthogonal Protecting Groups (The Alternatives)

© 2026 BenchChem. All rights reserved.

Standard benzyl/acetyl groups often fail when complex orthogonality is needed. Use these alternatives for specific "trouble" scenarios.

© 2026 BenchChem. All rights reserved.

Group	Name	Abbr.	Installation Site	Removal Condition	Why Use It?
Chloroacetyl	Chloroacetate	ClAc	C4 (via DBTO)	Thiourea / Pyridine	Mild Base Orthogonality: Can be removed without affecting other esters (Bz, Ac) or ethers (Bn).
Levulinyl	Levulinate	Lev	C2 or C3	Hydrazine / AcOH	Specific Orthogonality: Removed under neutral conditions; stable to acid/base used for other groups.
Silylene	Di-tert-butylsilylene	DTBS	C2/C3 or C3/C4	HF or TBAF	Simultaneous Blocking: Constrains the ring and protects two positions simultaneously. More stable than isopropylidene.[1]
Naphthyl	2-Naphthylmethyl	NAP	C2 (via base)	DDQ (Oxidative)	Oxidative Removal: Allows deprotection

© 2026 BenchChem. All rights reserved.

	in the presence of Benzyl ethers (which require hydrogenolysis).

Module 3: Glycosylation Dynamics & Beta-Selectivity

The Issue: Xylose is prone to forming

-linkages due to the anomeric effect. To ensure

-selectivity (1,2-trans), you must utilize Neighboring Group Participation (NGP).[2]

The Rule:

- For Beta-Selectivity: You must have an ester (Bz, Ac, Piv, ClAc) at C2.
- For Alpha-Selectivity: Use a non-participating ether (Bn, All, NAP) at C2.

Troubleshooting "Erosion of Beta-Selectivity": If you observe

-anomers despite having a C2-ester:

- Check Solvent: Acetonitrile (nitrile effect) favors

  . Ether/THF favors

  .
- Check Group Bulk: A massive group at C3 (e.g., TBDMS) can distort the ring, interfering with the C2-acylonium ion formation.[3] Switch to a smaller group (Bz) at C3.

© 2026 BenchChem. All rights reserved.

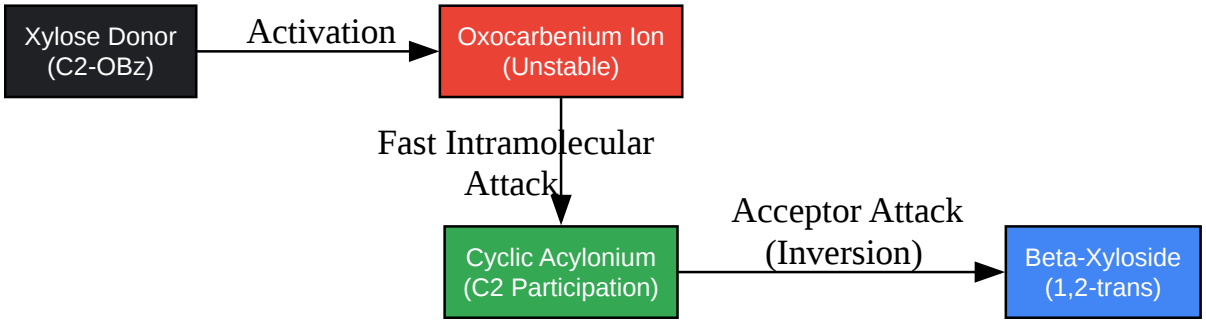

Click to download full resolution via product page

Figure 2: Mechanism of C2-ester mediated Neighboring Group Participation (NGP) ensuring beta-selectivity.

Troubleshooting & FAQs

Q1: I tried using 4,6-O-benzylidene protection like in glucose, but it failed. Why?

- Root Cause: Xylose is a pentose; it has no C6 carbon. Therefore, it cannot form the requisite 1,3-dioxane ring spanning C4 and C6.
- Solution: Use Di-tert-butylsilylene (DTBS). It can bridge the trans-diequatorial diols (C2/C3 or C3/C4) effectively, mimicking the cyclic protection you desire.

Q2: My acyl group at C4 is migrating to C3 during column chromatography.

- Root Cause: Acyl migration is rapid between cis-diols, but also occurs between trans-diequatorial diols in xylose under slightly basic conditions (silica gel can be slightly acidic or basic depending on treatment).
- Solution:
  - Switch to Pivaloyl (Piv) or Benzoyl (Bz) groups; they migrate much slower than Acetyl.
  - Use buffered silica gel or neutral alumina for purification.

Q3: How do I selectively protect C2 leaving C3 and C4 free?

© 2026 BenchChem. All rights reserved.

- Root Cause: C2-OH is inherently more acidic due to the electron-withdrawing inductive effect of the anomeric center.
- Protocol: Perform a controlled alkylation.
  - Conditions: NaH (1.1 eq), DMF, -20°C. Add BnBr (1.0 eq) very slowly.
  - Outcome: The alkoxide forms preferentially at C2.

Q4: Can I use Boronic Acids for xylose protection?

- Insight: Yes, but specificity varies. Phenylboronic acid typically forms a cyclic boronate ester. In

  -xylopyranosides, it tends to bridge C2/C4 (forming a bridged bicyclic system) or C2/C3 depending on the exact conditions and solvent.
- Application: This is best used as a transient masking strategy. For example, form the boronate to mask C2/C4, glycosylate at C3, then hydrolyze the boronate.

References

- Helm, R. F., Ralph, J., & Anderson, L. (1991). Regioselective protection strategies for D-xylopyranosides. The Journal of Organic Chemistry, 56(25), 7015-7021. Link
  - Core reference for DBTO medi
- Kováč, P. (1994). Approaches to the synthesis of xylo-oligosaccharides. Carbohydrate Research.
- Mastihubová, M., et al. (2014). Synthesis of hydroxycinnamoyl β-D-xylopyranosides and evaluation of their antioxidant properties. Carbohydrate Research, 388, 71-77. Link
  - Validates enzymatic regioselective deacetylation
- Herczeg, M., et al. (2009). Synthesis of regioselectively sulfated xylodextrins and crystal structure of sodium methyl beta-D-xylopyranoside 4-O-sulfate hemihydrate. Carbohydrate Research. Link

© 2026 BenchChem. All rights reserved.

- Confirms DBTO preference for C4 in beta-xylosides.

- Ferreira, L., et al. (2015). Regioselective modification of unprotected glycosides.[4][5] Chemical Communications. Link

  - Review of organotin and organoc

Need Custom Synthesis?

BenchChem offers custom synthesis for rare earth carbides and specific isotopiclabeling.

Email: info@benchchem.com or Request Quote Online.

Sources

- 1. scholarlypublications.universiteitleiden.nl [scholarlypublications.universiteitleiden.nl]
- 2. researchgate.net [researchgate.net]
- 3. scholarlypublications.universiteitleiden.nl [scholarlypublications.universiteitleiden.nl]
- 4. Regioselective modification of unprotected glycosides - Chemical Communications (RSC Publishing) DOI:10.1039/C5CC08199H [pubs.rsc.org]
- 5. researchgate.net [researchgate.net]
- To cite this document: BenchChem. [Technical Support Center: Advanced Protection Strategies for Beta-D-Xylopyranoside]. BenchChem, [2026]. [Online PDF]. Available at: [https://www.benchchem.com/product/b12066779/docs#technical-support-center-advanced-protection-strategies-for-beta-d-xylopyranoside]

Disclaimer & Data Validity:

The information provided in this document is for Research Use Only (RUO) and is strictly not intended for diagnostic or therapeutic procedures. While BenchChem strives to provide accurate protocols, we make no warranties, express or implied, regarding the fitness of this product for every specific experimental setup.

Technical Support: The protocols provided are for reference purposes. Unsure if this reagent suits your experiment?

© 2026 BenchChem. All rights reserved.

Need Industrial/Bulk Grade? Request Custom Synthesis Quote

BenchChem

Our mission is to be the trusted global source of essential and advanced chemicals, empowering scientists and researchers to drive progress in science and industry.

Contact

Address: 3281 E Guasti Rd

Ontario, CA 91761, United States

Phone: (601) 213-4426

Email: info@benchchem.com

Contact our Ph.D. Support Team for a compatibility check

© 2026 BenchChem. All rights reserved.