Application Notes and Protocols: Use of Nicotinamide Mononucleotide in Aging Research Models

Author: BenchChem Technical Support Team. **Date**: May 2026

Compound of Interest

Compound Name:	*Nicotinate mononucleotide*
Cat. No.:	*B1204604*

Get Quote

For Researchers, Scientists, and Drug Development Professionals

These application notes provide a comprehensive overview of the use of Nicotinamide Mononucleotide (NMN), a key NAD+ intermediate, in preclinical aging research. The following sections detail the mechanism of action, key experimental findings, and detailed protocols for utilizing NMN in various aging models.

Introduction

Nicotinamide Adenine Dinucleotide (NAD+) is a critical coenzyme in cellular metabolism and a substrate for several enzymes involved in aging processes, such as sirtuins and Poly (ADP-ribose) polymerases (PARPs).[1] NAD+ levels decline with age, and this decline is associated with numerous age-related physiological deteriorations.[1] Nicotinamide Mononucleotide (NMN) is a precursor to NAD+ and has emerged as a promising therapeutic agent to counteract the age-associated decline in NAD+ levels.[2] Supplementation with NMN has been shown to replenish cellular NAD+ pools, thereby activating sirtuins, enhancing DNA repair, and improving mitochondrial function in various aging research models.[2][3]

© 2026 BenchChem. All rights reserved.

Mechanism of Action

NMN exerts its anti-aging effects primarily by boosting the cellular levels of NAD+. This is achieved through the NAD+ salvage pathway, where NMN is converted to NAD+ by the enzyme Nicotinamide Mononucleotide Adenylyltransferase (NMNAT).[4] The increased NAD+ levels then influence several downstream pathways:

- Sirtuin Activation: Sirtuins are a class of NAD+-dependent deacetylases that play a crucial role in regulating lifespan and healthspan.[5] By increasing the availability of NAD+, NMN enhances sirtuin activity, leading to the deacetylation of various protein targets involved in metabolic regulation, stress resistance, and inflammation.[3][6]

- PARP Activation: PARPs are enzymes critical for DNA repair. Upon DNA damage, PARP1 is activated and consumes NAD+ to synthesize poly(ADP-ribose) chains that recruit DNA repair machinery.[7][8] Adequate NAD+ levels, supported by NMN supplementation, are essential for robust PARP-mediated DNA repair, thus maintaining genomic stability.

- Mitochondrial Function: The decline in NAD+ levels during aging impairs mitochondrial function. NMN supplementation has been shown to restore mitochondrial NAD+ pools, leading to improved mitochondrial respiration, increased ATP production, and enhanced mitochondrial quality control through processes like mitophagy.[9][10]

Data Presentation

The following tables summarize the quantitative effects of NMN supplementation observed in various aging research models.

Table 1: Effect of NMN Supplementation on NAD+ Levels

© 2026 BenchChem. All rights reserved.

Animal Model	Tissue/Cell Type	NMN Dose & Administration	Duration	Fold Increase in NAD+ (vs. Control)	Reference(s)
C57BL/6N Mice	Liver	300 mg/kg/day (in drinking water)	12 months	~1.5	[11]
C57BL/6N Mice	Skeletal Muscle	300 mg/kg/day (in drinking water)	12 months	~1.3	[11]
C57BL/6J Mice	Hippocampus	500 mg/kg (IP injection)	15 minutes	~1.3-1.4	[12]
C57BL/6 Mice	Liver	500 mg/kg (Oral Gavage)	6 hours	~2.5	[13]
Healthy Humans	Whole Blood	250 mg/day (oral)	12 weeks	Significant Increase	[2]
Healthy Humans	Serum	300 mg/day (oral)	60 days	~1.4 (NAD+/NADH ratio)	[2]

Table 2: Effect of NMN on Sirtuin Activity and Downstream Targets

© 2026 BenchChem. All rights reserved.

Animal Model/Cell Line	Target	NMN Treatment	Outcome	Quantitative Change	Reference(s)
Septic Mice	Hippocampus	NMN supplementation	Increased SIRT1 expression	Significant increase	
AD-Tg Mice	Brain	NMN treatment	Reduced SIRT1 levels (restoration)	~49% reduction from elevated levels	[10]
HeLa Cells	Sirt2 Expression	NMN pretreatment	Increased Sirt2 expression	Significant increase	[14]
Mouse Cardiomyocytes	Mitochondrial Proteins	NMN treatment	Increased deacetylation (SIRT3 activity)	Not specified	[5]

Table 3: Effect of NMN on Mitochondrial Respiration

© 2026 BenchChem. All rights reserved.

Animal Model	Tissue	NMN Dose & Administration	Outcome	Quantitative Change	Reference(s)
C57BL/6N Mice	Skeletal Muscle	300 mg/kg/day (in drinking water)	Increased maximal respiration rate (FCCP)	Significant enhancement	[9]
AD-Tg Mice	Brain Mitochondria	NMN treatment	Restored mitochondrial respiratory function	Significant restoration	[10]
Obese Mice	Liver	NMN supplementation	Ameliorated reduction in citrate synthase activity	Significant amelioration	[15]
Obese Mice	Muscle	NMN supplementation	No significant change in citrate synthase activity	-	[15]

Table 4: Effect of NMN on Lifespan in Model Organisms

© 2026 BenchChem. All rights reserved.

Organism	NMN Treatment	Median Lifespan Extension	Reference(s)
C. elegans	Nicotinic Acid (NAD+ precursor)	~17%	[16][17]
Female C57BL/6 Mice	~550 mg/kg/day (in drinking water) from 13 months	8.5%	[18][19][20][21]
Male C57BL/6 Mice	~550 mg/kg/day (in drinking water) from 13 months	No significant extension	[18][19][20]

Experimental Protocols

NMN Administration in Mice (Oral Gavage)

This protocol describes the acute administration of NMN to mice via oral gavage to assess rapid changes in NAD+ metabolism.

Materials:

- Nicotinamide Mononucleotide (NMN) powder
- Phosphate-buffered saline (PBS), sterile
- Gavage needles (20-22 gauge, ball-tipped)
- 1 mL syringes
- Animal balance

Procedure:

- Preparation of NMN Solution:
  - On the day of the experiment, prepare a fresh solution of NMN in sterile PBS.

© 2026 BenchChem. All rights reserved.

- For a dose of 300 mg/kg, dissolve the appropriate amount of NMN powder in PBS to achieve a final concentration that allows for a gavage volume of approximately 10 µL/g of body weight. For a 25g mouse, this would be 7.5 mg of NMN in 250 µL of PBS.
- Ensure the NMN is completely dissolved by vortexing.

- Animal Handling and Dosing:
  - Weigh each mouse accurately before dosing.
  - Gently restrain the mouse, ensuring a firm but not restrictive grip.
  - Measure the calculated volume of the NMN solution into a 1 mL syringe fitted with a gavage needle.
  - Carefully insert the gavage needle into the esophagus and slowly administer the solution.
  - Monitor the animal for any signs of distress during and after the procedure.
- Tissue Collection:
  - At predetermined time points (e.g., 15, 30, 60 minutes) post-gavage, euthanize the mice according to approved institutional protocols.
  - Rapidly dissect the tissues of interest (e.g., liver, skeletal muscle, brain), rinse with ice-cold PBS, blot dry, and snap-freeze in liquid nitrogen.
  - Store the frozen tissues at -80°C until NAD+ extraction and analysis.

Measurement of NAD+ Levels by HPLC

This protocol outlines the extraction and quantification of NAD+ from tissue samples using reverse-phase high-performance liquid chromatography (HPLC).

Materials:

- Frozen tissue samples
- Perchloric acid (PCA), 0.6 M, ice-cold

© 2026 BenchChem. All rights reserved.

- Potassium carbonate (K2CO3), 3 M
- HPLC system with a C18 reverse-phase column
- Mobile Phase A: 0.1 M sodium phosphate buffer, pH 6.0
- Mobile Phase B: 100% Methanol
- NAD+ standard
- Microcentrifuge, refrigerated
- Syringe filters (0.22 µm)

Procedure:

- NAD+ Extraction:
  - Weigh the frozen tissue (~50-100 mg) and homogenize in 5 volumes of ice-cold 0.6 M PCA.
  - Centrifuge the homogenate at 14,000 x g for 10 minutes at 4°C.
  - Carefully collect the supernatant (acid-soluble fraction).
  - Neutralize the supernatant by adding 3 M K2CO3 dropwise until the pH is between 6.0 and 7.0.
  - Incubate on ice for 15 minutes to allow for the precipitation of potassium perchlorate.
  - Centrifuge at 14,000 x g for 10 minutes at 4°C.
  - Collect the supernatant and filter it through a 0.22 µm syringe filter into an HPLC vial.
- HPLC Analysis:
  - Equilibrate the C18 column with 100% Mobile Phase A.
  - Inject 20-50 µL of the filtered sample extract onto the column.

© 2026 BenchChem. All rights reserved.

- Elute the NAD+ using a gradient of Mobile Phase B (e.g., 0-10% methanol over 20 minutes) at a flow rate of 1 mL/min.
- Detect NAD+ by UV absorbance at 260 nm.
- Quantify the NAD+ concentration by comparing the peak area to a standard curve generated with known concentrations of NAD+.
- Normalize the NAD+ levels to the initial tissue weight or protein concentration of the homogenate.

Sirtuin Activity Assay (Fluorometric)

This in vitro assay measures the deacetylase activity of SIRT1 using a fluorogenic substrate.

Materials:

- Recombinant human SIRT1 enzyme
- Fluorogenic SIRT1 substrate (e.g., Fluor de Lys-SIRT1)
- NAD+
- NMN
- SIRT1 assay buffer (e.g., 50 mM Tris-HCl pH 8.0, 137 mM NaCl, 2.7 mM KCl, 1 mM MgCl2)
- Developer solution (containing a protease to cleave the deacetylated substrate)
- 96-well black microplate
- Fluorescence plate reader

Procedure:

- Reagent Preparation:
  - Prepare a stock solution of NMN in the assay buffer.

© 2026 BenchChem. All rights reserved.

- Prepare serial dilutions of NMN to be tested.
- Prepare solutions of SIRT1 enzyme, fluorogenic substrate, and NAD+ in the assay buffer at the desired concentrations.

- Assay Reaction:
  - In a 96-well black microplate, add the following to each well:
    - SIRT1 assay buffer
    - NMN solution at various concentrations (or vehicle control)
    - NAD+ solution
    - SIRT1 enzyme
  - Pre-incubate the mixture at 37°C for 10 minutes.
  - Initiate the reaction by adding the fluorogenic SIRT1 substrate.
  - Incubate the plate at 37°C for 60 minutes, protected from light.
- Development and Detection:
  - Stop the reaction and develop the fluorescent signal by adding the developer solution to each well.
  - Incubate at room temperature for 15 minutes.
  - Measure the fluorescence using a plate reader with excitation at ~360 nm and emission at ~460 nm.
- Data Analysis:
  - Subtract the background fluorescence (wells without SIRT1 enzyme) from all readings.
  - Plot the fluorescence intensity against the NMN concentration to determine the dose-dependent effect on SIRT1 activity.

© 2026 BenchChem. All rights reserved.

PARP Activity Assay (Colorimetric)

This assay measures the activity of PARP by quantifying the incorporation of biotinylated ADP-ribose onto histone proteins.

Materials:

- Nuclear extract from cells or tissues
- PARP assay buffer
- Biotinylated NAD+
- Histone-coated 96-well plate
- Streptavidin-HRP conjugate
- HRP substrate (e.g., TMB)
- Stop solution (e.g., 1 M H2SO4)
- Plate reader

Procedure:

- Assay Setup:
  - Add nuclear extracts (containing PARP) to the wells of the histone-coated plate.
  - To initiate the PARP reaction, add a reaction cocktail containing biotinylated NAD+ to each well.
  - Incubate the plate at 37°C for 60 minutes.
- Detection:
  - Wash the plate to remove unincorporated biotinylated NAD+.

© 2026 BenchChem. All rights reserved.

- Add streptavidin-HRP conjugate to each well and incubate at room temperature for 60 minutes.
- Wash the plate to remove unbound conjugate.
- Add the HRP substrate and incubate until a color develops.
- Stop the reaction by adding the stop solution.

- Data Analysis:
  - Measure the absorbance at 450 nm using a plate reader.
  - The absorbance is directly proportional to the PARP activity.

Mitochondrial Respiration in Permeabilized Skeletal Muscle Fibers

This protocol measures oxygen consumption rates in permeabilized muscle fibers to assess mitochondrial function.

Materials:

- Freshly dissected skeletal muscle (e.g., soleus, EDL)
- BIOPS buffer (for permeabilization)
- Saponin
- High-resolution respirometer (e.g., Oroboros O2k)
- Respiration medium (e.g., MiR05)
- Substrates and inhibitors (e.g., pyruvate, malate, ADP, succinate, rotenone, FCCP)

Procedure:

- Fiber Preparation:

© 2026 BenchChem. All rights reserved.

- Dissect a small piece of skeletal muscle in ice-cold BIOPS buffer.
- Mechanically separate the muscle fibers using fine forceps under a microscope.
- Permeabilize the fibers by incubating with saponin (e.g., 50 µg/mL) in BIOPS buffer on ice for 30 minutes with gentle agitation.
- Wash the permeabilized fibers extensively with respiration medium to remove the saponin.

- Respirometry:
  - Calibrate the oxygen sensors of the high-resolution respirometer.
  - Add a small bundle of permeabilized fibers (1-3 mg wet weight) to the respirometer chamber containing air-saturated respiration medium.
  - Record the basal respiration rate (State 2).
  - Sequentially add substrates and inhibitors to assess different respiratory states:
    - State 3 (oxidative phosphorylation): Add malate, pyruvate, and a saturating concentration of ADP.
    - Complex I-linked respiration: Measure after the addition of ADP.
    - Complex II-linked respiration: Add rotenone (to inhibit Complex I) followed by succinate.
    - Maximal electron transport chain capacity: Add a chemical uncoupler like FCCP.
    - Residual oxygen consumption: Add antimycin A (to inhibit Complex III).

- Data Analysis:
  - Calculate the oxygen consumption rates for each respiratory state, normalized to the muscle fiber wet weight.
  - Determine respiratory control ratios (RCR) and other parameters of mitochondrial function.

© 2026 BenchChem. All rights reserved.

Visualizations

Signaling Pathways and Experimental Workflows

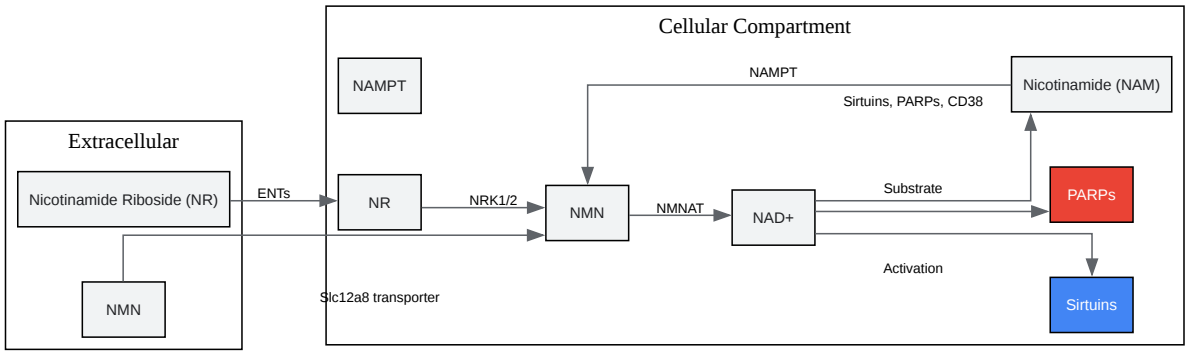

Click to download full resolution via product page

Caption: The NAD+ Salvage Pathway.

© 2026 BenchChem. All rights reserved.

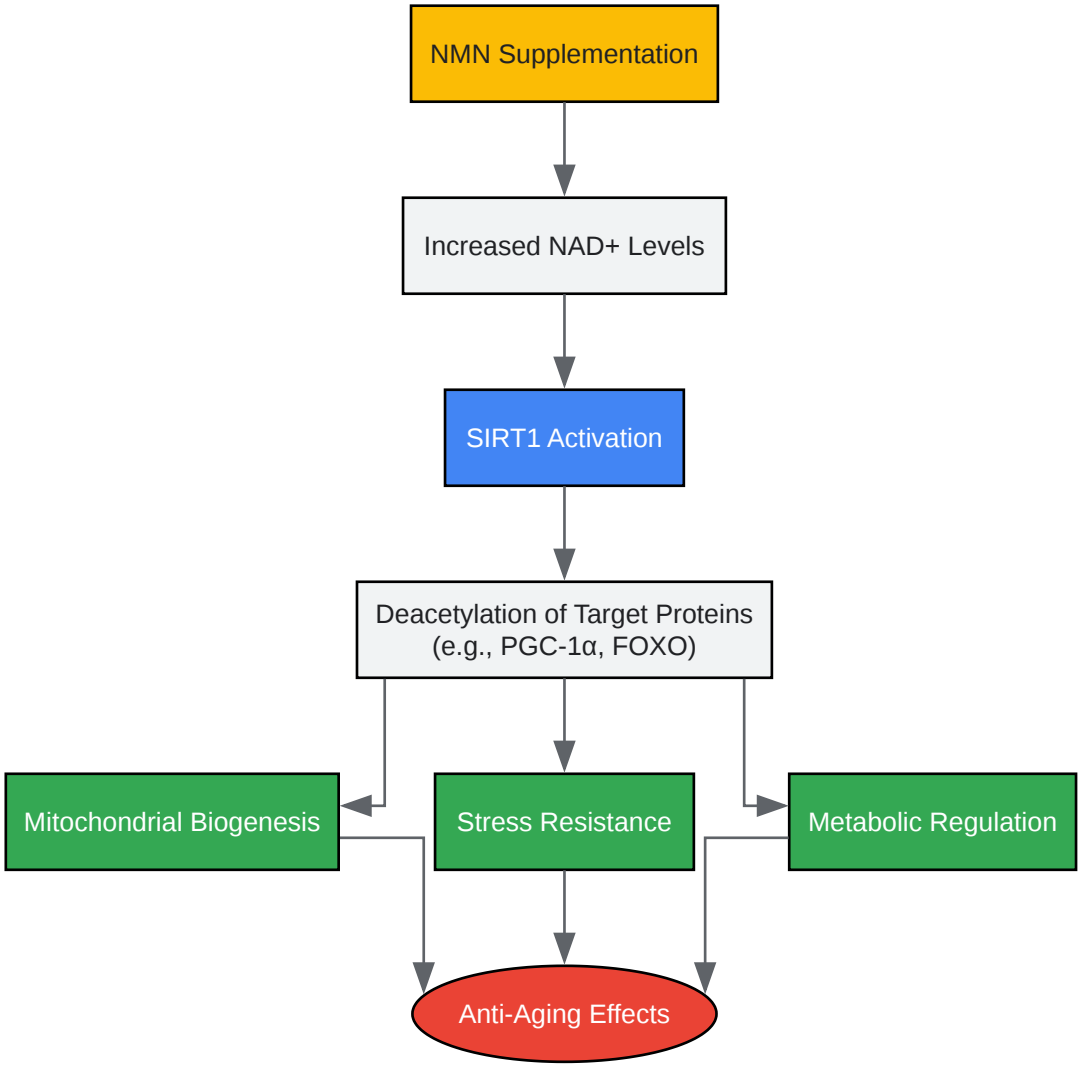

Click to download full resolution via product page

Caption: Sirtuin Activation by NMN.

© 2026 BenchChem. All rights reserved.

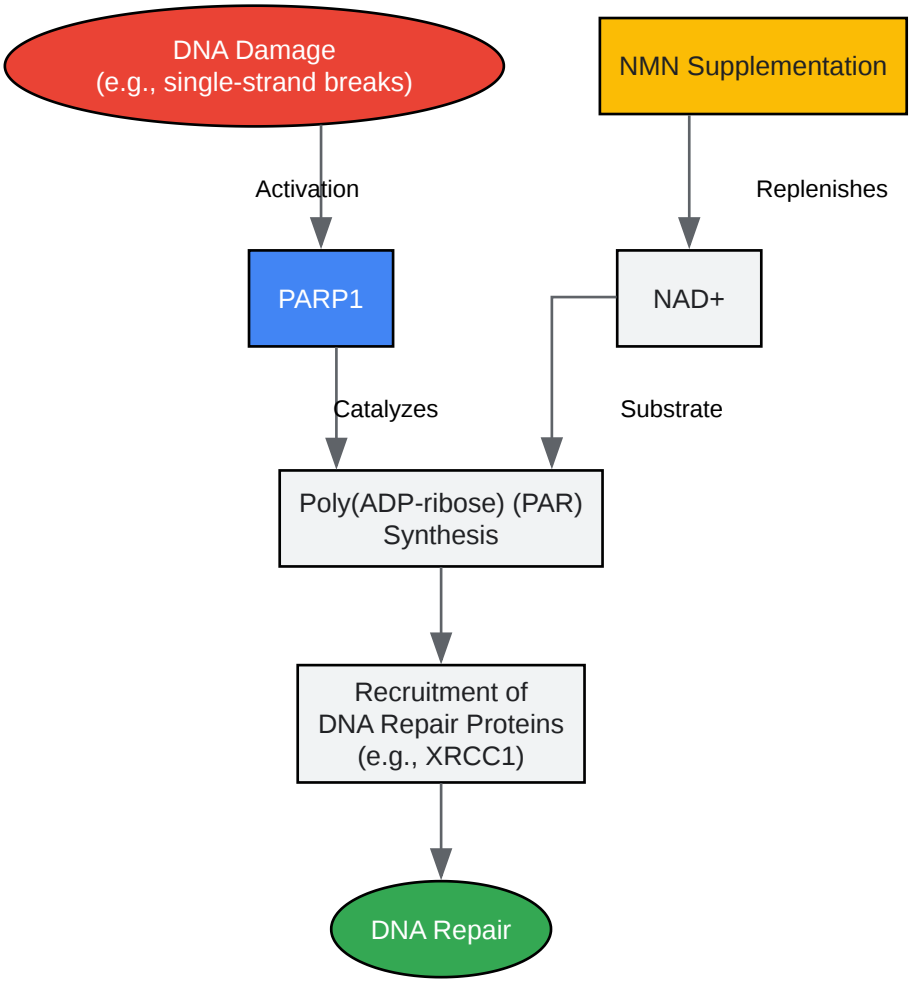

Click to download full resolution via product page

Caption: PARP Activation and DNA Repair.

© 2026 BenchChem. All rights reserved.

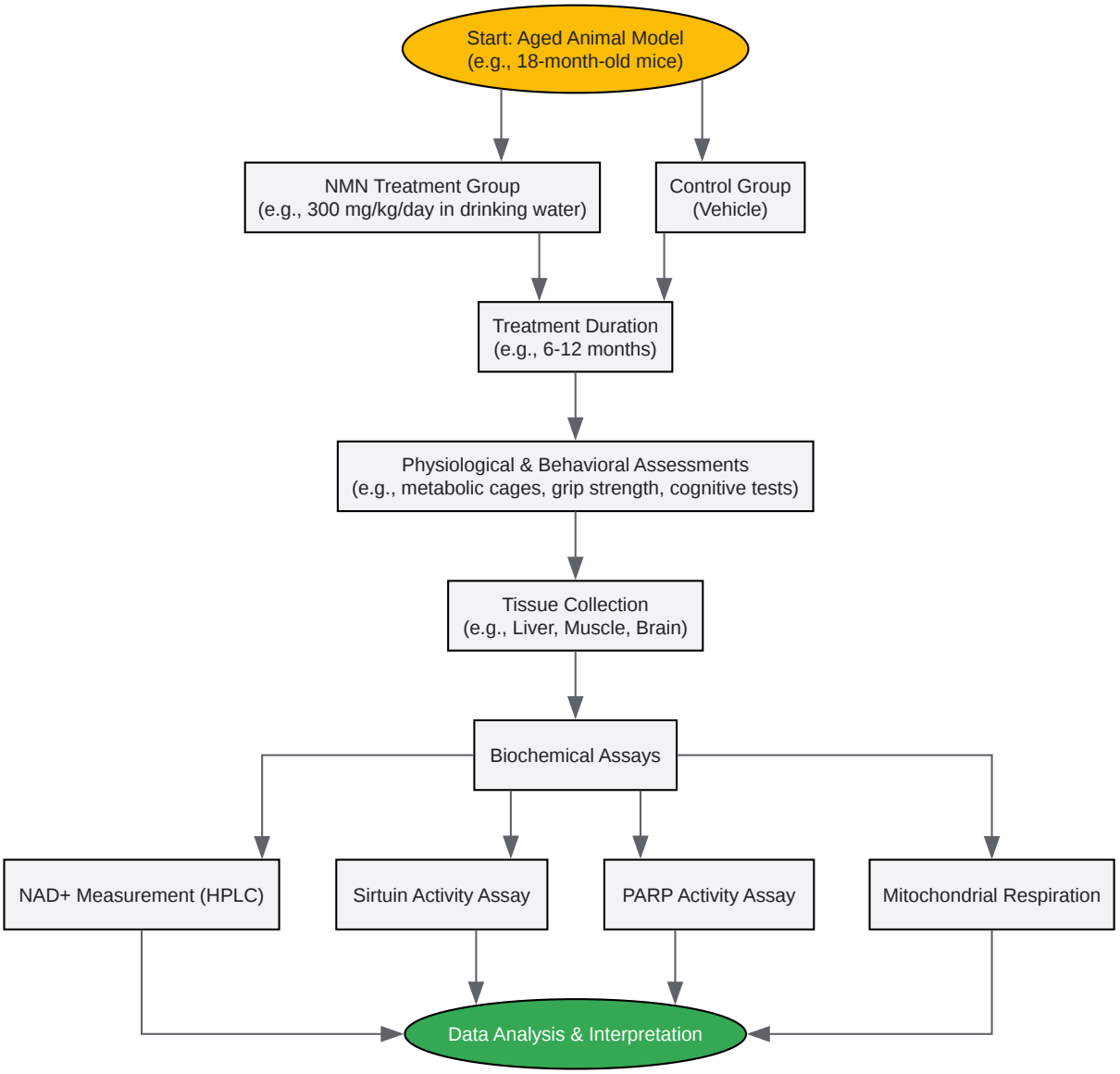

Click to download full resolution via product page

Caption: Experimental Workflow for NMN Aging Study.

© 2026 BenchChem. All rights reserved.

Need Custom Synthesis?

BenchChem offers custom synthesis for rare earth carbides and specific isotopiclabeling.

Email: info@benchchem.com or Request Quote Online.

References

- 1. The Science Behind NMN–A Stable, Reliable NAD+Activator and Anti-Aging Molecule - PMC [pmc.ncbi.nlm.nih.gov]
- 2. NAD+ Precursors Nicotinamide Mononucleotide (NMN) and Nicotinamide Riboside (NR): Potential Dietary Contribution to Health - PMC [pmc.ncbi.nlm.nih.gov]
- 3. benchchem.com [benchchem.com]
- 4. The Secret Life of NAD+: An Old Metabolite Controlling New Metabolic Signaling Pathways - PMC [pmc.ncbi.nlm.nih.gov]
- 5. Frontiers | Modulating Sirtuin Biology and Nicotinamide Adenine Diphosphate Metabolism in Cardiovascular Disease—From Bench to Bedside [frontiersin.org]
- 6. The Sirtuin Secret: New Study Shows How NMN Helps These Longevity Enzymes Combat Aging [nmn.com]
- 7. researchgate.net [researchgate.net]
- 8. researchgate.net [researchgate.net]
- 9. plantpills.co.uk [plantpills.co.uk]
- 10. researchgate.net [researchgate.net]
- 11. Long-term administration of nicotinamide mononucleotide mitigates age-associated physiological decline in mice - PMC [pmc.ncbi.nlm.nih.gov]
- 12. mdpi.com [mdpi.com]
- 13. researchgate.net [researchgate.net]
- 14. NMN partially rescues cuproptosis by upregulating sirt2 to increase intracellular NADPH - PMC [pmc.ncbi.nlm.nih.gov]
- 15. frontiersin.org [frontiersin.org]
- 16. Study Indicates Why B3 Vitamin Improves Roundworm Lifespan but Not Human [nmn.com]

© 2026 BenchChem. All rights reserved.

- 17. The Lifespan Extension Ability of Nicotinic Acid Depends on Whether the Intracellular NAD+ Level Is Lower than the Sirtuin-Saturating Concentrations - PMC [pmc.ncbi.nlm.nih.gov]
- 18. biorxiv.org [biorxiv.org]
- 19. researchgate.net [researchgate.net]
- 20. New Harvard Study Shows NMN Increases the Lifespan of Naturally Aging Mice [nmn.com]
- 21. consensus.app [consensus.app]

- To cite this document: BenchChem. [Application Notes and Protocols: Use of Nicotinamide Mononucleotide in Aging Research Models]. BenchChem, [2026]. [Online PDF]. Available at: [https://www.benchchem.com/product/b1204604/docs#application-notes-and-protocols-use-of-nicotinamide-mononucleotide-in-aging-research-models]

Disclaimer & Data Validity:

The information provided in this document is for Research Use Only (RUO) and is strictly not intended for diagnostic or therapeutic procedures. While BenchChem strives to provide accurate protocols, we make no warranties, express or implied, regarding the fitness of this product for every specific experimental setup.

Technical Support: The protocols provided are for reference purposes. Unsure if this reagent suits your experiment?

Need Industrial/Bulk Grade? Request Custom Synthesis Quote

BenchChem

Our mission is to be the trusted global source of essential and advanced chemicals, empowering scientists and researchers to drive progress in science and industry.

Contact

Address: 3281 E Guasti Rd

Ontario, CA 91761, United States

Phone: (601) 213-4426

Email: info@benchchem.com

© 2026 BenchChem. All rights reserved.

Contact our Ph.D. Support Team for a compatibility check

© 2026 BenchChem. All rights reserved.