Application Notes and Protocols for 2-Hydroxyethyl Carbamate in Hydrogel Formulation

Author: BenchChem Technical Support Team. **Date**: May 2026

Compound of Interest

Compound Name:	*2-Hydroxyethyl carbamate*
CAS No.:	*5395-01-7*
Cat. No.:	*B1202747*

Get Quote

For Researchers, Scientists, and Drug Development Professionals

Abstract

This document provides a comprehensive technical guide on the application of **2-Hydroxyethyl carbamate** (HEC) in the formulation of advanced hydrogel systems. While not a conventional monomer in hydrogel synthesis, the unique bifunctional nature of HEC, possessing both a primary hydroxyl group and a carbamate moiety, presents novel opportunities for creating hydrogels with tailored properties. This guide explores the fundamental chemistry of HEC and proposes scientifically grounded, theoretical pathways for its incorporation into hydrogel networks. Detailed, albeit hypothetical, protocols for synthesis and characterization are provided to serve as a foundational resource for researchers venturing into this innovative area of material science. The potential implications for drug delivery and tissue engineering are also discussed, underpinned by an understanding of the chemistry of the carbamate linkage.

© 2026 BenchChem. All rights reserved.

Introduction: Unveiling the Potential of 2-Hydroxyethyl Carbamate in Hydrogel Science

Hydrogels, three-dimensional polymeric networks capable of absorbing and retaining large volumes of water, are at the forefront of biomedical research, with applications spanning drug delivery, tissue engineering, and diagnostics. The choice of monomer is critical in defining the physicochemical properties of the resulting hydrogel. **2-Hydroxyethyl carbamate** ($C_3H_7NO_3$) is a fascinating, yet underexplored, molecule in the context of hydrogel formulation.[1] Its structure, featuring a reactive hydroxyl (-OH) group and a carbamate (-NHCOO-) linkage, offers intriguing possibilities for polymer synthesis and crosslinking.

The carbamate group is a key structural motif in many approved drugs and prodrugs, valued for its chemical stability and ability to participate in hydrogen bonding.[2][3] In the realm of polymer chemistry, the carbamate linkage is the cornerstone of polyurethanes, a versatile class of polymers known for their excellent mechanical properties and biocompatibility.[4][5][6] This guide will explore how the unique attributes of **2-Hydroxyethyl carbamate** can be harnessed to create novel hydrogel platforms.

The Chemistry of 2-Hydroxyethyl Carbamate: A Dual-Functionality Monomer

To appreciate its potential in hydrogel formulation, a fundamental understanding of **2-Hydroxyethyl carbamate**'s reactive sites is essential.

- The Hydroxyl Group (-OH): This primary alcohol is a versatile functional group that can participate in a wide array of polymerization reactions, most notably in the formation of polyurethanes through reaction with isocyanates.[4][7][8] It can also be functionalized to introduce other polymerizable groups.

- The Carbamate Group (-NHCOO-): The carbamate linkage itself can be a site for chemical modification or degradation. While generally stable, the carbamate bond can undergo hydrolysis or enzymatic degradation under specific conditions.[9][10] Furthermore, it can participate in transcarbamoylation reactions, offering a potential route for dynamic network formation or recycling.[1][11]

© 2026 BenchChem. All rights reserved.

The presence of both these functionalities in a single, small molecule makes **2-Hydroxyethyl carbamate** a unique building block for creating hydrogels with potentially novel characteristics.

Table 1: Physicochemical Properties of **2-Hydroxyethyl Carbamate**

Property	Value
Molecular Formula	$C_3H_7NO_3$
Molecular Weight	105.09 g/mol
Appearance	White crystalline solid
Melting Point	46-49 °C
Boiling Point	130 °C (decomposes)
Solubility	Soluble in water and ethanol

Proposed Synthetic Pathways for **2-Hydroxyethyl Carbamate**-Based Hydrogels

Given the nascent stage of research into HEC-based hydrogels, this section outlines theoretical yet scientifically plausible synthetic strategies. These pathways are grounded in established principles of polymer chemistry.

Pathway A: Polyurethane-Based Hydrogels via Diisocyanate Crosslinking

This approach leverages the reactivity of the hydroxyl group of **2-Hydroxyethyl carbamate** with diisocyanates to form a crosslinked polyurethane network. The inherent hydrophilicity of the 2-hydroxyethyl group and the potential for hydrogen bonding from the carbamate moiety are expected to result in a hydrogel.

Reaction Mechanism: The fundamental reaction is the polyaddition of the hydroxyl groups of HEC with the isocyanate groups of a diisocyanate crosslinker.

© 2026 BenchChem. All rights reserved.

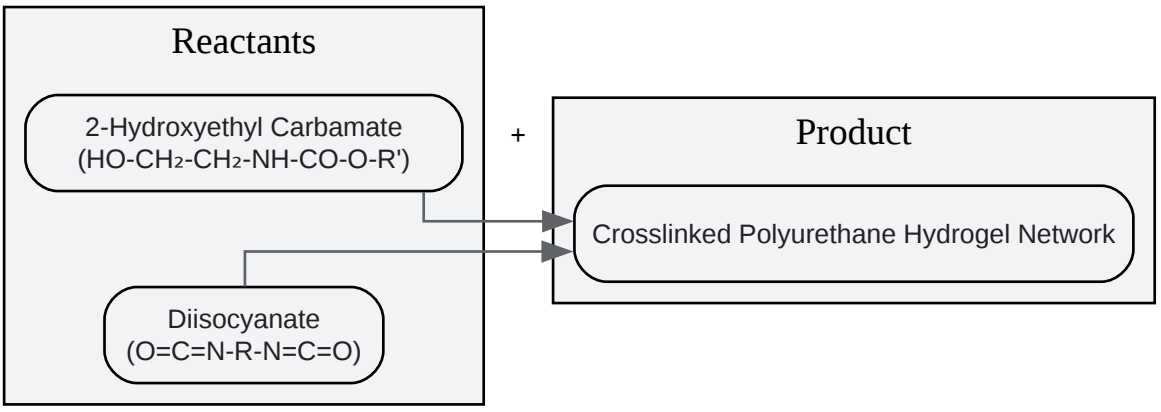

Click to download full resolution via product page

Figure 1: Polyurethane Hydrogel Formation. A schematic representation of the reaction between **2-Hydroxyethyl carbamate** and a diisocyanate to form a crosslinked hydrogel network.

Causality Behind Experimental Choices:

- Choice of Diisocyanate: The selection of the diisocyanate (e.g., hexamethylene diisocyanate (HDI), isophorone diisocyanate (IPDI)) is critical. Aliphatic diisocyanates are generally preferred for biomedical applications due to the lower toxicity of their degradation byproducts compared to aromatic diisocyanates.[12]
- Solvent: A polar, aprotic solvent such as dimethylformamide (DMF) or dimethyl sulfoxide (DMSO) is typically used to dissolve the reactants and facilitate the reaction.
- Catalyst: A catalyst, such as dibutyltin dilaurate (DBTDL), is often employed to accelerate the urethane formation reaction.[7]

Pathway B: Isocyanate-Free Synthesis via Transcarbamoylation

To circumvent the use of potentially toxic isocyanates, an isocyanate-free route can be envisioned through a transcarbamoylation reaction.[1][11][13] This would involve reacting **2-Hydroxyethyl carbamate** with a dicarbamate crosslinker in the presence of a suitable catalyst.

© 2026 BenchChem. All rights reserved.

Reaction Mechanism: This pathway involves the exchange of the alcohol portion of the carbamate ester.

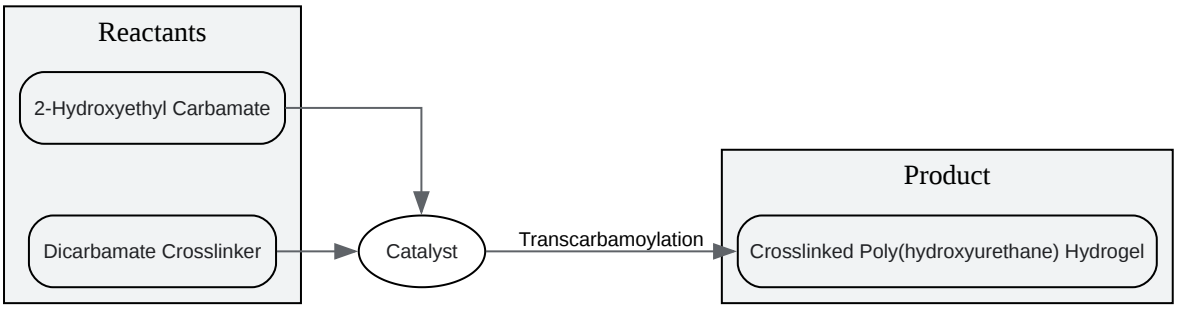

Click to download full resolution via product page

Figure 2: Isocyanate-Free Hydrogel Synthesis. A conceptual workflow for the transcarbamoylation reaction to form a polyurethane-like hydrogel without the use of isocyanates.

Causality Behind Experimental Choices:

- Dicarbamate Crosslinker: A molecule with two carbamate groups would be required to form a crosslinked network.
- Catalyst: Transcarbamoylation reactions are typically catalyzed by bases or specific organometallic compounds.[1] The choice of catalyst would be critical to achieving a reasonable reaction rate and yield.

Pathway C: Functionalization of the Hydroxyl Group for Vinyl Polymerization

This strategy involves chemically modifying the hydroxyl group of **2-Hydroxyethyl carbamate** to introduce a polymerizable vinyl group (e.g., an acrylate or methacrylate). The resulting monomer can then be copolymerized with other vinyl monomers and a crosslinker to form a hydrogel via free-radical polymerization.

© 2026 BenchChem. All rights reserved.

Reaction Mechanism: This is a two-step process: first, the esterification of the hydroxyl group, followed by free-radical polymerization.

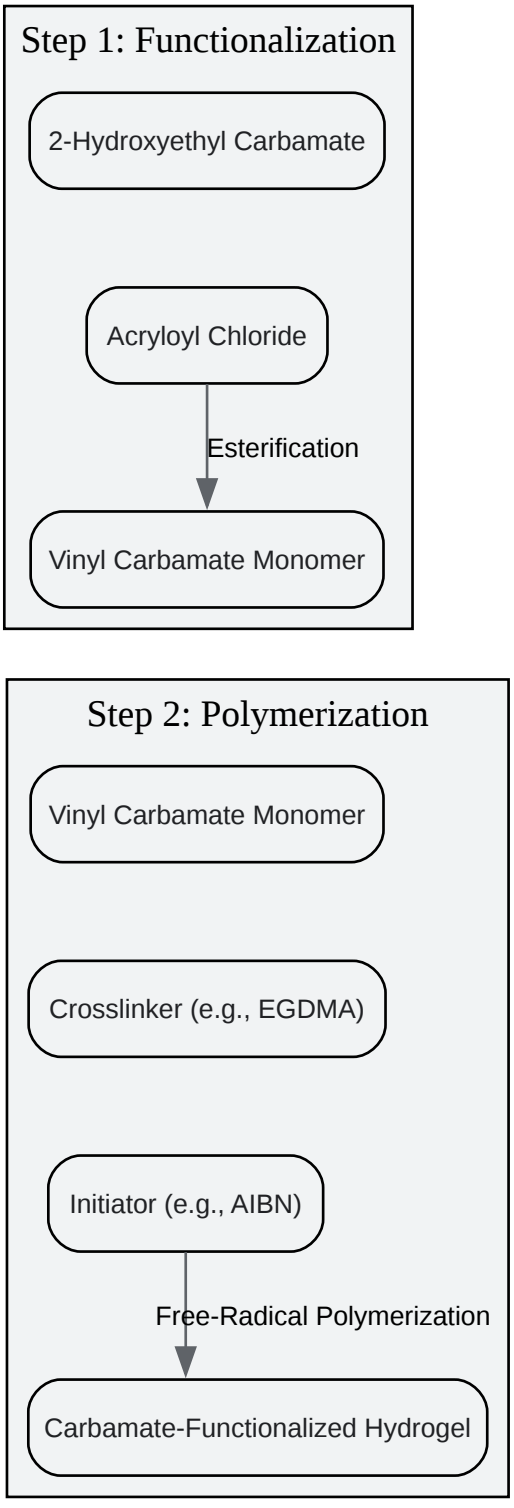

Click to download full resolution via product page

© 2026 BenchChem. All rights reserved.

Need Custom Synthesis?

BenchChem offers custom synthesis for rare earth carbides and specific isotopiclabeling.

Email: info@benchchem.com or Request Quote Online.

Sources

- 1. Recycling Polyurethanes through Transcarbamoylation - PMC [pmc.ncbi.nlm.nih.gov]
- 2. researchgate.net [researchgate.net]
- 3. Organic Carbamates in Drug Design and Medicinal Chemistry - PMC [pmc.ncbi.nlm.nih.gov]
- 4. pubs.acs.org [pubs.acs.org]
- 5. Tough hydrophilic polyurethane-based hydrogels with mechanical properties similar to human soft tissues - Journal of Materials Chemistry B (RSC Publishing) [pubs.rsc.org]
- 6. Biocompatible polyurethane-based hydrogel - PubMed [pubmed.ncbi.nlm.nih.gov]
- 7. Polyethylene Glycol-Isophorone Diisocyanate Polyurethane Prepolymers Tailored Using MALDI MS - PMC [pmc.ncbi.nlm.nih.gov]
- 8. researchgate.net [researchgate.net]
- 9. Conserved Metabolic and Evolutionary Themes in Microbial Degradation of Carbamate Pesticides - PMC [pmc.ncbi.nlm.nih.gov]
- 10. Discovery of carbamate degrading enzymes by functional metagenomics | PLOS One [journals.plos.org]
- 11. pubs.acs.org [pubs.acs.org]
- 12. Poly(hydroxyurethane)s: biosourced isocyanate-free polyurethanes - PolymerExpert [polymerexpert.fr]
- 13. mdpi.com [mdpi.com]
- To cite this document: BenchChem. [Application Notes and Protocols for 2-Hydroxyethyl Carbamate in Hydrogel Formulation]. BenchChem, [2026]. [Online PDF]. Available at: [https://www.benchchem.com/product/b1202747/docs#application-notes-and-protocols-for-2-hydroxyethyl-carbamate-in-hydrogel-formulation]

Disclaimer & Data Validity:

© 2026 BenchChem. All rights reserved.

The information provided in this document is for Research Use Only (RUO) and is strictly not intended for diagnostic or therapeutic procedures. While BenchChem strives to provide accurate protocols, we make no warranties, express or implied, regarding the fitness of this product for every specific experimental setup.

Technical Support: The protocols provided are for reference purposes. Unsure if this reagent suits your experiment?

Need Industrial/Bulk Grade? Request Custom Synthesis Quote

BenchChem

Our mission is to be the trusted global source of essential and advanced chemicals, empowering scientists and researchers to drive progress in science and industry.

Contact

Address: 3281 E Guasti Rd

Ontario, CA 91761, United States

Phone: (601) 213-4426

Email: info@benchchem.com

Contact our Ph.D. Support Team for a compatibility check

© 2026 BenchChem. All rights reserved.