Technical Guide: Genotoxicity of Dibenzocarbazole Derivatives

Author: BenchChem Technical Support Team. **Date**: April 2026

Compound of Interest

Compound Name:	*7H-Dibenzo(a,g)carbazole, 9-chloro-*
CAS No.:	*21075-05-8*
Cat. No.:	*B1199929*

Get Quote

Mechanisms, Protocols, and Structure-Activity Relationships

Executive Summary

7H-Dibenzo[c,g]carbazole (7H-DBC) is a potent N-heterocyclic aromatic hydrocarbon (N-HAH) environmental pollutant found in tobacco smoke and coal tar. Unlike typical polycyclic aromatic hydrocarbons (PAHs) that act primarily locally, DBC exhibits a unique "dual-action" carcinogenicity, affecting both the liver (systemic) and the skin/subcutaneous tissue (local).

This guide dissects the Structure-Activity Relationships (SAR) governing this toxicity. The critical insight for drug developers and toxicologists is that minor structural modifications—specifically methylation at the Nitrogen (N-position) versus the Carbon rings (C-positions)—drastically alter the metabolic fate, enzyme affinity (CYP1A1 vs. CYP1A2), and organotropism of these compounds.

Chemical Classification & SAR

© 2026 BenchChem. All rights reserved.

The genotoxic potential of DBC derivatives hinges on the accessibility of the "K-region" (positions 5,6 and 8,9) and the "Bay-region" equivalents, as well as the electronic status of the pyrrole nitrogen.

Compound Class	Representative Molecule	Primary Target Organ	Genotoxic Mechanism
Parent N-HAH	7H-Dibenzo[c,g]carbazole (DBC)	Liver, Skin, Lung	Mixed: Epoxidation & Radical Cation
N-Substituted	N-methyl-DBC (N-MeDBC)	Skin, Sarcoma	Radical Cation (One-electron oxidation)
Ring-Substituted	5,9-dimethyl-DBC (DiMeDBC)	Liver (Strict)	Steric hindrance of N-oxidation; CYP1A2 driven
Nitrated	5,9-dinitro-DBC	Systemic	Nitroreduction & Ring Oxidation

Mechanisms of Action

The genotoxicity of DBC derivatives is not intrinsic but acquired through metabolic activation. Two competing pathways dictate the biological outcome.

Pathway Logic

- Pathway A (Epoxidation/Hydroxylation): Mediated largely by CYP1A2/2C9 in the liver. Leads to phenolic metabolites (3-OH-DBC, 4-OH-DBC) which are proximate genotoxins.[1]
- Pathway B (One-Electron Oxidation): Mediated by CYP1A1 (often extrahepatic/skin). The pyrrole nitrogen is oxidized to a radical cation, which directly attacks DNA (depurinating adducts).

Visualization: Metabolic Branching

The following diagram illustrates the divergence in metabolic activation based on structural substitution.

© 2026 BenchChem. All rights reserved.

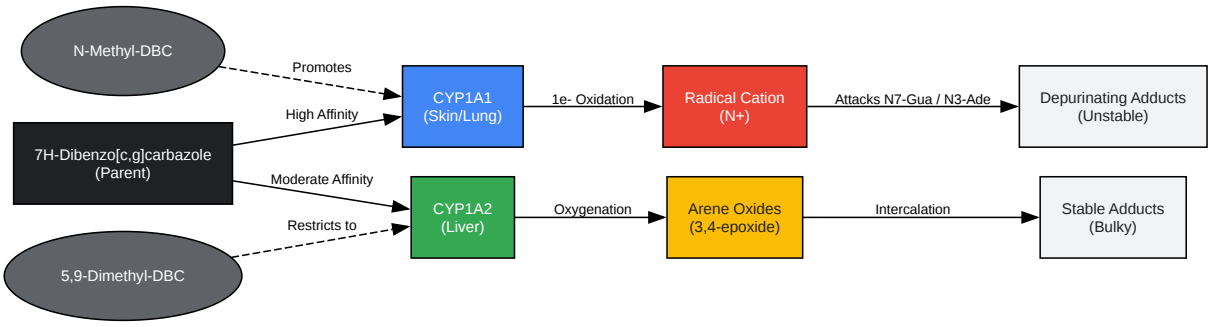

Click to download full resolution via product page

Caption: Divergent metabolic activation pathways of DBC derivatives determining organ-specific genotoxicity.

Experimental Assessment Protocols

To accurately assess the genotoxicity of these hydrophobic compounds, standard assays must be modified. Standard Ames tests often fail to detect the full potency of N-MeDBC due to the specific S9 fraction requirements.

Protocol: 32P-Postlabeling for DNA Adducts

This is the Gold Standard for DBC derivatives because many DBC adducts are depurinating (unstable) or too bulky for PCR-based detection.

Reagents:

- Micrococcal Nuclease (MN)[2][3]
- Spleen Phosphodiesterase (SPD)
- Nuclease P1 (NP1)[2]
- [

© 2026 BenchChem. All rights reserved.

-32P]ATP (>5000 Ci/mmol)

- T4 Polynucleotide Kinase (PNK)[2][3]

Workflow:

- Digestion: Incubate

  DNA with MN and SPD at

  for 4 hours.

  - Critical Step: This yields nucleoside 3'-monophosphates (Np).

- Enrichment (Nuclease P1 Method): Treat digest with Nuclease P1.[2][3]

  - Mechanism:[4][5][6] NP1 dephosphorylates normal nucleotides to nucleosides but is inhibited by the bulky DBC adducts. Adducts remain as nucleotides.

- Labeling: Incubate enriched sample with [

  -32P]ATP and T4 PNK.[3]

  - Result: Adducts are 5'-labeled, becoming [32P]pXp.

- Separation: Multi-directional Thin Layer Chromatography (TLC) on PEI-cellulose plates.

  - Solvent D1: 1.0 M Sodium phosphate, pH 6.0 (Washes away residual ATP).

  - Solvent D3/D4: Urea/Lithium Formate gradients (Resolves hydrophobic adducts).

- Quantification: Screen via phosphorimaging.

Protocol: In Vitro Micronucleus Assay (HepG2 vs HaCaT)

To distinguish hepatocarcinogens from sarcomagens, use two cell lines.

- Cell Models:

© 2026 BenchChem. All rights reserved.

- HepG2: High CYP1A2/2C9 expression (Liver model).
- HaCaT: High CYP1A1 expression (Skin/Epithelial model).

- Dosing: Treat cells with DBC derivatives (

) for 24 hours.
- Block: Add Cytochalasin B (

) to block cytokinesis.
- Harvest: Fix and stain with Acridine Orange.
- Scoring: Count micronuclei (MN) in binucleated cells (BNC).
  - Validation: N-MeDBC should induce high MN in HaCaT but low in HepG2. DiMeDBC should show the inverse.

Quantitative Data Review

The following data summarizes the mutagenic potency and adduct burden of key derivatives.

Table 1: Comparative Mutagenicity and Adduct Formation

Compound	Ames Test (TA98 + S9) [Rev/nmol]	Liver DNA Adducts (Adducts/10^8 nuc)	Skin DNA Adducts (Adducts/10^8 nuc)	Classification
7H-DBC	850	24.5	7.9	Systemic Carcinogen
N-MeDBC	1,200	2.1	15.4	Potent Sarcomagen
DiMeDBC	150	45.0	< 0.5	Hepatocarcinogen
5-NO2-DBC	2,100	N/D	N/D	Direct Mutagen

© 2026 BenchChem. All rights reserved.

Note: Data aggregated from Gábelová et al. and comparative studies in MutaMouse models.

Pathway Visualization: Adduct Consequences

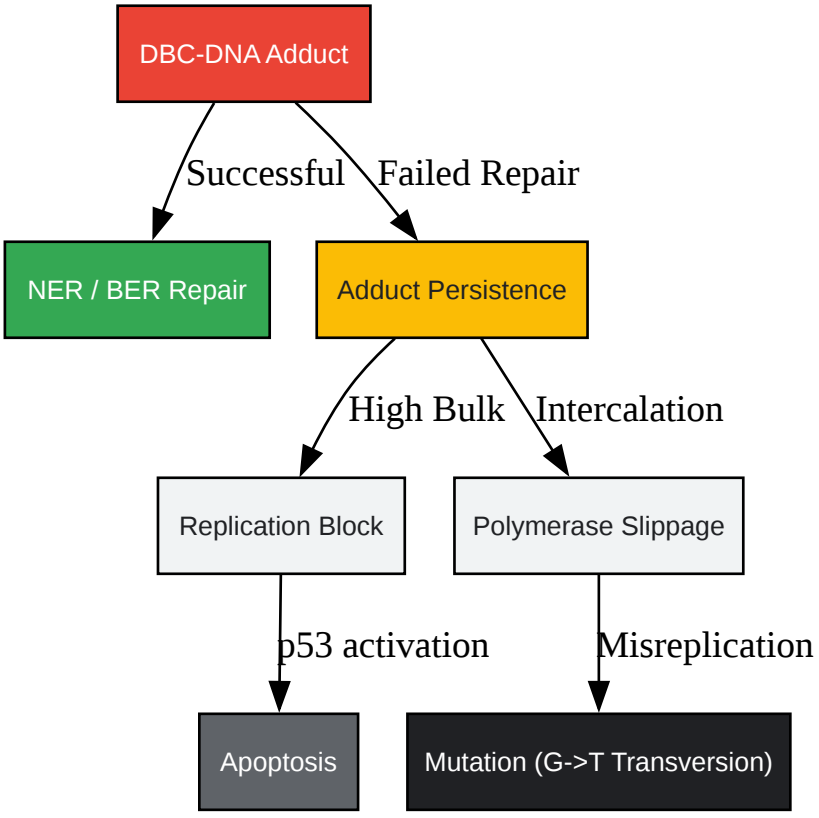

Click to download full resolution via product page

Caption: Downstream consequences of persistent DBC-DNA adducts leading to mutagenesis.

References

- Gábelová, A., et al. (2011). "Genotoxicity of 7H-dibenzo[c,g]carbazole and its tissue-specific derivatives in human hepatoma HepG2 cells is related to CYP1A1/1A2 expression."[7] Environmental and Molecular Mutagenesis. Link

- Valovičová, Z., et al. (2012). "Genotoxicity of 7H-dibenzo[c,g]carbazole and its methyl derivatives in human keratinocytes."[8] Mutation Research/Genetic Toxicology and Environmental Mutagenesis. Link

- Schmeiser, H.H., et al. (1998). "Comparative mutagenicity of 7H-dibenzo[c,g]carbazole and two derivatives in MutaMouse liver and skin." Mutation Research. Link

© 2026 BenchChem. All rights reserved.

- Phillips, D.H., & Arlt, V.M. (2007). "The 32P-postlabeling assay for DNA adducts." Nature Protocols. Link
- Chen, L., et al. (2013). "Synthesis of depurinating DNA adducts formed by one-electron oxidation of 7H-dibenzo[c,g]carbazole." Chemical Research in Toxicology. Link

Need Custom Synthesis?

BenchChem offers custom synthesis for rare earth carbides and specific isotopiclabeling.

Email: info@benchchem.com or Request Quote Online.

Sources

- 1. pubs.acs.org [pubs.acs.org]
- 2. hugendubel.info [hugendubel.info]
- 3. researchgate.net [researchgate.net]
- 4. Mechanism of 7H-Dibenzo[c,g]carbazole metabolism in cytochrome P450 1A1: Insights from computational studies - PubMed [pubmed.ncbi.nlm.nih.gov]
- 5. researchgate.net [researchgate.net]
- 6. The 32P-postlabeling assay for DNA adducts - PubMed [pubmed.ncbi.nlm.nih.gov]
- 7. Genotoxicity of 7H-dibenzo[c,g]carbazole and its tissue-specific derivatives in human hepatoma HepG2 cells is related to CYP1A1/1A2 expression - PubMed [pubmed.ncbi.nlm.nih.gov]
- 8. Genotoxicity of 7H-dibenzo[c,g]carbazole and its methyl derivatives in human keratinocytes - PubMed [pubmed.ncbi.nlm.nih.gov]
- To cite this document: BenchChem. [Technical Guide: Genotoxicity of Dibenzocarbazole Derivatives]. BenchChem, [2026]. [Online PDF]. Available at: [https://www.benchchem.com/product/b1199929/docs#technical-guide-genotoxicity-of-dibenzocarbazole-derivatives]

Disclaimer & Data Validity:

The information provided in this document is for Research Use Only (RUO) and is strictly not intended for diagnostic or therapeutic procedures. While BenchChem strives to provide

accurate protocols, we make no warranties, express or implied, regarding the fitness of this product for every specific experimental setup.

Technical Support: The protocols provided are for reference purposes. Unsure if this reagent suits your experiment?

Need Industrial/Bulk Grade? Request Custom Synthesis Quote

BenchChem

Our mission is to be the trusted global source of essential and advanced chemicals, empowering scientists and researchers to drive progress in science and industry.

Contact

Address: 3281 E Guasti Rd

Ontario, CA 91761, United States

Phone: (601) 213-4426

Email: info@benchchem.com

Contact our Ph.D. Support Team for a compatibility check

© 2026 BenchChem. All rights reserved.