Technical Support Center: Cisapride Monohydrate and hERG Potassium Channels

Author: BenchChem Technical Support Team. **Date**: April 2026

Compound of Interest

Compound Name: *Cisapride monohydrate*

Cat. No.: *B1198533*

Get Quote

This technical support center provides troubleshooting guidance and frequently asked questions (FAQs) for researchers, scientists, and drug development professionals investigating the off-target effects of **cisapride monohydrate** on hERG potassium channels.

Frequently Asked Questions (FAQs)

Q1: What is the established mechanism of cisapride blockade of hERG potassium channels?

A1: Cisapride is a potent blocker of the hERG (human Ether-à-go-go-Related Gene) potassium channel, which is responsible for the rapid delayed rectifier K+ current (IKr) crucial for cardiac repolarization.[1][2][3] The blockade is not simple; it exhibits time-, voltage-, and frequency-dependence.[4][5] Cisapride demonstrates a high affinity for both the open and inactivated states of the hERG channel, meaning the block is most effective when the channels are activated by membrane depolarization.[1][4][6] The main effect of cisapride is an enhancement of the rate of hERG current decay.[7][8]

Q2: What are the typical IC50 values reported for cisapride blockade of hERG channels?

A2: The IC50 value for cisapride's blockade of hERG channels can vary depending on the experimental conditions, such as the expression system, temperature, and the specific voltage

© 2026 BenchChem. All rights reserved.

protocol used.[9] However, it is consistently in the nanomolar range, making cisapride a very potent hERG blocker.[1][6][7][8][10] The therapeutic plasma concentrations of cisapride can reach levels that are significantly higher than its hERG IC50, which underlies its proarrhythmic potential.[4][8]

Q3: How does temperature affect the potency of cisapride's hERG blockade?

A3: Studies have shown that the potency of cisapride's blockade of hERG channels is similar at room temperature (20-22°C) and physiological temperature (37°C).[4][5] This suggests that temperature is not a major factor influencing the IC50 value of cisapride for hERG channels.

Q4: Does the external potassium concentration influence cisapride's effect on hERG channels?

A4: Yes, the external potassium concentration ([K+]o) modulates the blockade of hERG channels by cisapride. An increase in [K+]o has been shown to reduce the potency of the cisapride blockade.[4][5] This is an important consideration for in vitro experiments, as variations in buffer composition can affect the results.

Troubleshooting Guides

Problem 1: Inconsistent IC50 values for cisapride in our hERG assay.

- Possible Cause 1: Different experimental protocols.
  - Solution: Ensure that a standardized voltage protocol is used across all experiments. The IC50 of cisapride can be influenced by the duration and voltage of the depolarizing steps.[7][8][9] It is recommended to use a protocol that allows for sufficient channel activation and inactivation, where cisapride binding is strongest. The FDA recommends specific voltage protocols for assessing drug effects on hERG channels.[11][12]
- Possible Cause 2: Fluctuation in external potassium concentration.
  - Solution: Verify the composition of your extracellular solution. As mentioned in the FAQs, higher [K+]o can decrease the blocking potency of cisapride.[4][5] Maintain a consistent and accurately prepared external solution for all experiments.
- Possible Cause 3: Instability of the whole-cell patch clamp recording.

© 2026 BenchChem. All rights reserved.

- Solution: Monitor the stability of your recordings. Changes in seal resistance or cell health during an experiment can lead to variability in current measurements. Ensure a stable baseline current is achieved before applying cisapride.[12][13]

Problem 2: The observed hERG block by cisapride is less than expected based on published data.

- Possible Cause 1: Cisapride solution degradation.
  - Solution: Prepare fresh stock solutions of cisapride regularly. Cisapride is typically dissolved in a solvent like DMSO to create a stock solution.[4] Ensure the final concentration of the solvent in the experimental solution is low and consistent, as high concentrations could have their own effects.
- Possible Cause 2: The voltage protocol does not sufficiently induce the channel states to which cisapride binds.
  - Solution: Use a voltage protocol with a prolonged depolarizing step to maximize the population of open and inactivated hERG channels.[7][8] This will enhance the apparent affinity of cisapride.

Problem 3: Difficulty in achieving a complete washout of the cisapride effect.

- Possible Cause: While some studies report rapid recovery after washout,[1][6] incomplete washout could be due to the high affinity of cisapride for the hERG channel.
  - Solution: Prolong the washout period and ensure a continuous and adequate flow of the control solution over the cell.

Quantitative Data Summary

Table 1: IC50 Values for Cisapride Blockade of hERG Channels

© 2026 BenchChem. All rights reserved.

Cell Line	Temperature (°C)	Voltage Protocol	IC50 (nM)	Reference
CHO-K1	20-22	Step to +25 mV	16.4	[4]
CHO-K1	37	Step to +25 mV	23.6	[4]
HEK293	22	Step to +10 mV	6.5	[1][6][10]
Mammalian Cells	Not Specified	Step to +20 mV (2s)	44.5	[7][8]
Mammalian Cells	Not Specified	Step to +20 mV (20s)	6.7	[7][8]
CHO	Not Specified	Not Specified	8.9	[3]
HEK293	37	Varied	7 - 72	[9]
HEK293	Not Specified	Not Specified	32.63	[14]

Experimental Protocols

Whole-Cell Patch-Clamp Electrophysiology for Assessing Cisapride Effects on hERG Channels

This protocol is a generalized procedure based on common methodologies cited in the literature.[1][4][13]

1. Cell Preparation:

- Use a stable cell line expressing hERG channels (e.g., HEK293 or CHO cells).
- Culture cells to 70-80% confluency on glass coverslips.
- Place a coverslip in the recording chamber on the microscope stage and perfuse with extracellular solution.

2. Solutions:

© 2026 BenchChem. All rights reserved.

- Intracellular (Pipette) Solution (in mM): 120 K-gluconate, 20 KCl, 1.5 MgATP, 5 EGTA, 10 HEPES. Adjust pH to 7.3 with KOH.[4][12]
- Extracellular (Bath) Solution (in mM): 130 NaCl, 4.8 KCl, 1.2 MgCl2, 1.2 NaH2PO4, 10 HEPES, 12.5 Glucose, 1.0 CaCl2. Adjust pH to 7.4 with NaOH.[4]
- Cisapride Stock Solution: Prepare a stock solution in DMSO. Dilute to final concentrations in the extracellular solution just before use. The final DMSO concentration should not exceed 0.1%.[4]

3. Recording Procedure:

- Establish a whole-cell patch-clamp configuration.
- Compensate for whole-cell capacitance and at least 80% of the series resistance.[4]
- Hold the membrane potential at -80 mV.
- Apply a voltage-clamp protocol to elicit hERG currents. A typical protocol involves:
  - A depolarizing step to a potential between +10 mV and +25 mV for 1-2 seconds to activate and inactivate the channels.
  - A repolarizing step to -50 mV to record the deactivating tail current, which is often used for quantifying the block.[1][4][13]
- Record stable baseline currents in the control extracellular solution.
- Perfuse the cell with increasing concentrations of cisapride, allowing the drug effect to reach a steady state at each concentration before recording.
- Perform a washout with the control solution to assess the reversibility of the block.

4. Data Analysis:

- Measure the peak amplitude of the hERG tail current in the absence and presence of cisapride.

© 2026 BenchChem. All rights reserved.

- Normalize the current at each cisapride concentration to the control current.
- Plot the normalized current against the logarithm of the cisapride concentration and fit the data to the Hill equation to determine the IC50 and Hill coefficient.[4][13]

Visualizations

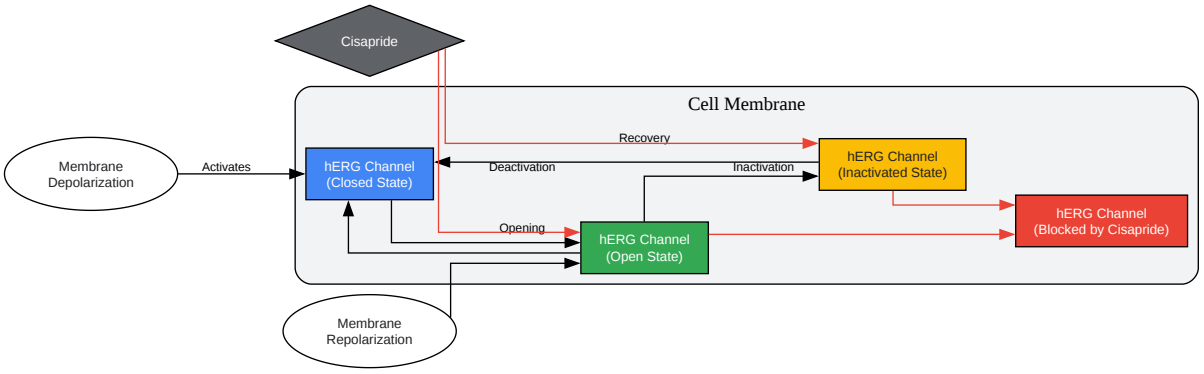

Click to download full resolution via product page

Caption: Cisapride's binding to open and inactivated hERG channel states.

© 2026 BenchChem. All rights reserved.

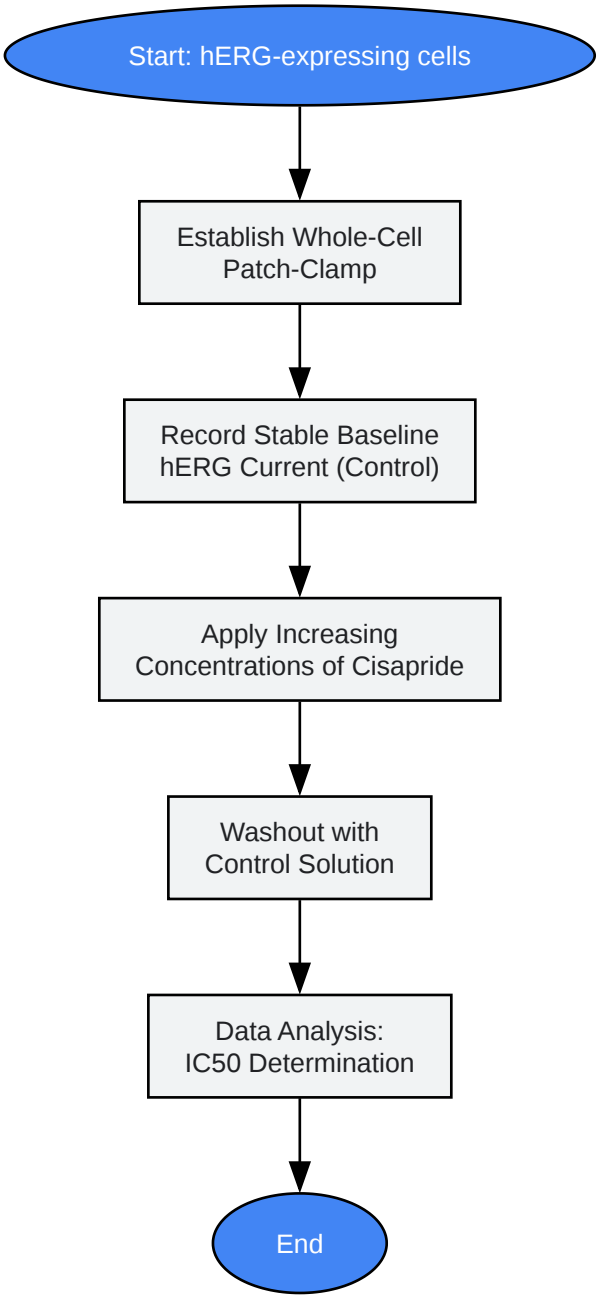

Click to download full resolution via product page

Caption: Workflow for electrophysiological assessment of cisapride's hERG block.

© 2026 BenchChem. All rights reserved.

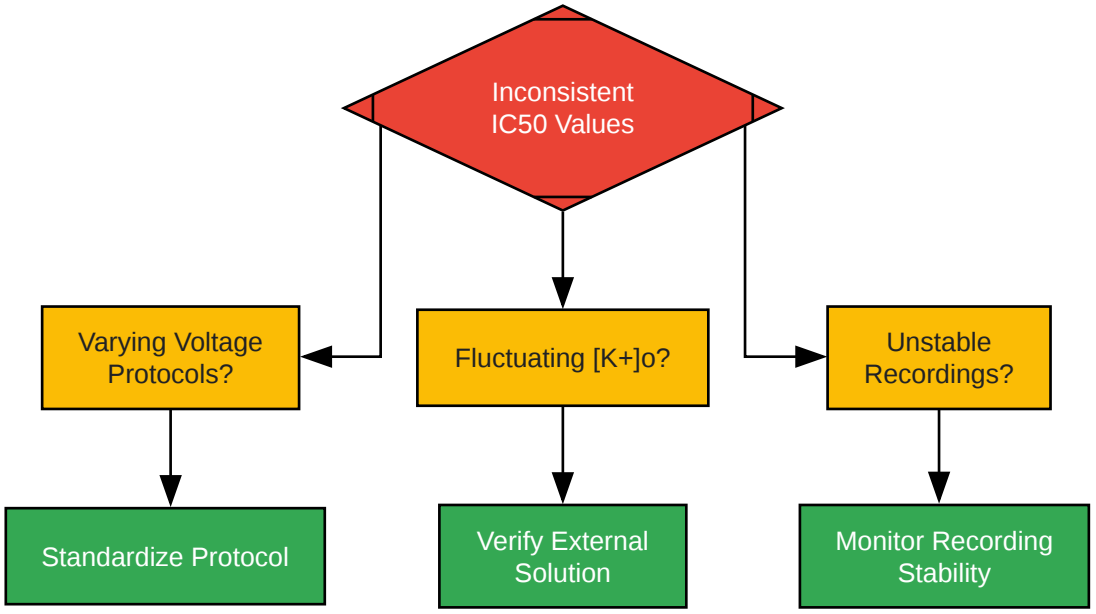

Click to download full resolution via product page

Caption: Troubleshooting logic for inconsistent IC50 values.

Need Custom Synthesis?

BenchChem offers custom synthesis for rare earth carbides and specific isotopiclabeling.

Email: info@benchchem.com or Request Quote Online.

References

- 1. journals.physiology.org [journals.physiology.org]
- 2. pnas.org [pnas.org]
- 3. Making sure you're not a bot! [nanion.de]
- 4. Inhibition of the human ether-a-go-go-related gene (HERG) potassium channel by cisapride: affinity for open and inactivated states - PMC [pmc.ncbi.nlm.nih.gov]
- 5. Inhibition of the human ether-a-go-go-related gene (HERG) potassium channel by cisapride: affinity for open and inactivated states - PubMed [pubmed.ncbi.nlm.nih.gov]
- 6. Blockage of the HERG human cardiac K+ channel by the gastrointestinal prokinetic agent cisapride - PubMed [pubmed.ncbi.nlm.nih.gov]

© 2026 BenchChem. All rights reserved.

- 7. A mechanism for the proarrhythmic effects of cisapride (Propulsid): high affinity blockade of the human cardiac potassium channel HERG - PubMed [pubmed.ncbi.nlm.nih.gov]
- 8. files.core.ac.uk [files.core.ac.uk]
- 9. researchgate.net [researchgate.net]
- 10. go.drugbank.com [go.drugbank.com]
- 11. fda.gov [fda.gov]
- 12. fda.gov [fda.gov]
- 13. benchchem.com [benchchem.com]
- 14. Vicious LQT induced by a combination of factors different from hERG inhibition - PMC [pmc.ncbi.nlm.nih.gov]

- To cite this document: BenchChem. [Technical Support Center: Cisapride Monohydrate and hERG Potassium Channels]. BenchChem, [2026]. [Online PDF]. Available at: [https://www.benchchem.com/product/b1198533/docs#technical-support-center-cisapride-monohydrate-and-herg-potassium-channels]

Disclaimer & Data Validity:

The information provided in this document is for Research Use Only (RUO) and is strictly not intended for diagnostic or therapeutic procedures. While BenchChem strives to provide accurate protocols, we make no warranties, express or implied, regarding the fitness of this product for every specific experimental setup.

Technical Support: The protocols provided are for reference purposes. Unsure if this reagent suits your experiment?

Need Industrial/Bulk Grade? Request Custom Synthesis Quote

BenchChem

Our mission is to be the trusted global source of essential and advanced chemicals, empowering scientists and researchers to drive progress in science and industry.

Contact

Address: 3281 E Guasti Rd

Ontario, CA 91761, United States

Phone: (601) 213-4426

Email: info@benchchem.com

© 2026 BenchChem. All rights reserved.

Contact our Ph.D. Support Team for a compatibility check

© 2026 BenchChem. All rights reserved.