A Comparative Analysis of Butenylating Agents: Precision, Reactivity, and Protocol

Author: BenchChem Technical Support Team. **Date**: May 2026

Compound of Interest

Compound Name:	*1-Chloro-2-butene*
CAS No.:	*591-97-9*
Cat. No.:	*B1196595*

Get Quote

Executive Summary Butenylation—the introduction of a butenyl group (

)—is a critical transformation in the synthesis of polyketides, terpene mimetics, and heterocyclic pharmaceuticals. Unlike simple methylation, butenylation presents a unique challenge: regiochemical ambiguity. The presence of the double bond creates two electrophilic sites (

and

), leading to mixtures of linear (

) and branched (

) isomers.

This guide compares the three dominant classes of butenylating agents:

- Classical Electrophiles: Crotyl Halides (Bromide/Chloride).
- Homoallylic Agents: 4-Halo-1-butenes.
- Catalytic Precursors: Allylic Carbonates/Acetates (via Palladium catalysis).[1]

© 2026 BenchChem. All rights reserved.

The Chemistry of Butenylation: The Regioselectivity Problem

The core difficulty in using 2-butenyl (crotyl) agents is the competition between direct displacement and allylic rearrangement.

- Linear Attack (

  -attack): The nucleophile attacks the carbon bearing the leaving group. This preserves the double bond position (Result: 2-butenyl).

- Branched Attack (

  -attack): The nucleophile attacks the double bond, causing a shift in

  -electrons and expelling the leaving group (Result: 1-methyl-2-propenyl).

Mechanistic Pathway Visualization

The following diagram illustrates the divergent pathways that dictate product purity.

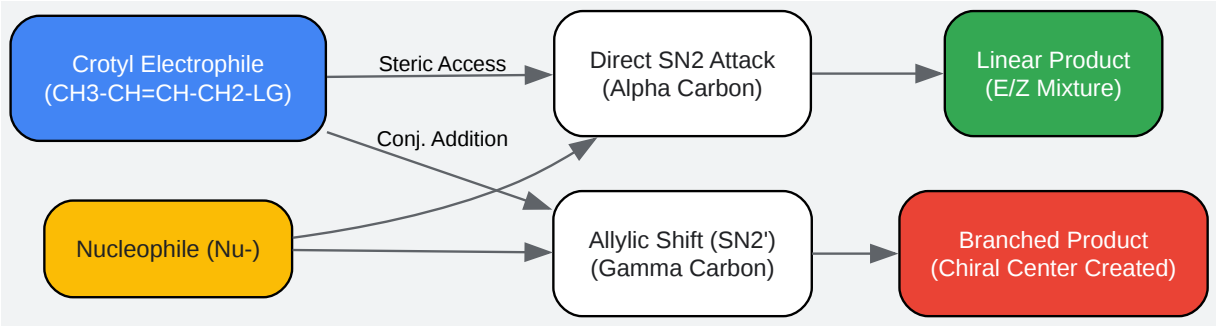

Click to download full resolution via product page

Caption: Divergent reaction pathways for crotyl electrophiles. Control over

vs.

attack is the primary selection criterion for reagents.

Comparative Analysis of Reagents

© 2026 BenchChem. All rights reserved.

Class A: Crotyl Halides (The Classical Approach)

Agents: Crotyl Bromide (1-bromo-2-butene), Crotyl Chloride (**1-chloro-2-butene**).

These are the workhorses of butenylation but are "blunt instruments." They exist as equilibrium mixtures of E and Z isomers (typically 85:15 E:Z).

- Crotyl Bromide:
  - Pros: High reactivity due to weak C-Br bond; rapid reaction at room temperature.
  - Cons: Significant lachrymator; degrades upon storage (stabilized with epoxides); poor regiocontrol with hard nucleophiles.
- Crotyl Chloride:
  - Pros: More stable than bromide; cheaper; lower molecular weight (better atom economy).
  - Cons: Slower kinetics often require heating (which increases byproduct formation); requires iodide catalysis (Finkelstein conditions) to match bromide reactivity.

Class B: Homoallylic Agents

Agent: 4-Bromo-1-butene.

Used when the double bond must be distal to the attachment point.

- Pros: No regiochemical ambiguity (cannot undergo

  easily).
- Cons: Lower reactivity than allylic halides; often requires higher temperatures or stronger bases.

Class C: Tsuji-Trost Precursors (The Precision Approach)

Agents: Crotyl Acetate, Crotyl Methyl Carbonate.

© 2026 BenchChem. All rights reserved.

These are unreactive to direct nucleophilic attack. They require a Palladium(0) catalyst to form a

-allyl complex.

- Pros: Exceptional regiocontrol (tunable via ligands); ability to set stereocenters; works under neutral conditions (no strong base required).
- Cons: High cost (Pd catalyst + Ligand); oxygen sensitivity requires inert atmosphere.

Performance Data & Selection Matrix

The following table synthesizes performance metrics based on standard alkylation of a secondary amine (e.g., piperazine) and a carbon nucleophile (e.g., malonate).

Feature	Crotyl Bromide	Crotyl Chloride	4-Bromo-1-butene	Pd-Cat. Carbonate
Reactivity	High (RT)	Moderate (Requires Heat/I-)	Low (Heat required)	Tunable (Catalytic)
Linear:Branched Ratio	~4:1 (variable)	~3:1	>99:1 (N/A)	>20:1 (Ligand dependent)
Stereoretention	Low (E/Z scrambles)	Low	High	High (Retention of config.)[2]
Atom Economy	59%	71%	59%	Low (Loss of CO2/MeOH)
Toxicity	Severe Lachrymator	Toxic/Flammable	Irritant	Low (Precursor) / High (Cat)
Cost	Low	Very Low	Moderate	High

Standardized Experimental Protocols

Protocol A: Classical N-Butenylation (Cost-Effective)

Target: Synthesis of N-crotyl piperazine derivatives. Mechanism: Direct

© 2026 BenchChem. All rights reserved.

displacement.

Reagents:

- Substrate: Secondary Amine (1.0 equiv)
- Reagent: Crotyl Bromide (1.1 equiv)
- Base:

  (2.0 equiv) - Note: Use inorganic base to sequester HBr.
- Solvent: Acetonitrile (ACN) or DMF.

Step-by-Step:

- Preparation: Dissolve amine in ACN (0.2 M concentration) under

  atmosphere.
- Activation: Add powdered, anhydrous

  . Stir for 10 min.
- Addition: Add Crotyl Bromide dropwise at 0°C. Critical: Exothermic reaction; control addition rate to prevent thermal isomerization.
- Reaction: Allow to warm to RT. Monitor via TLC/LCMS (approx. 2-4 hours).
- Workup: Filter off inorganic salts. Concentrate filtrate.
- Purification: Flash chromatography (usually required to separate small amounts of branched isomer).

Protocol B: Pd-Catalyzed Asymmetric Butenylation (High Precision)

Target: Enantioselective C-alkylation of active methylenes. Mechanism: Tsuji-Trost Allylation via

-allyl intermediate.[3][4][5]

© 2026 BenchChem. All rights reserved.

Reagents:

- Substrate: Dimethyl malonate (1.0 equiv)
- Reagent: Crotyl Methyl Carbonate (1.1 equiv)
- Catalyst:

  (2.5 mol%)
- Ligand: Trost Ligand (e.g., (S,S)-DACH-Phenyl Trost Ligand) (5-10 mol%)
- Base: BSA (N,O-Bis(trimethylsilyl)acetamide) (catalytic base generation).

Workflow Visualization:

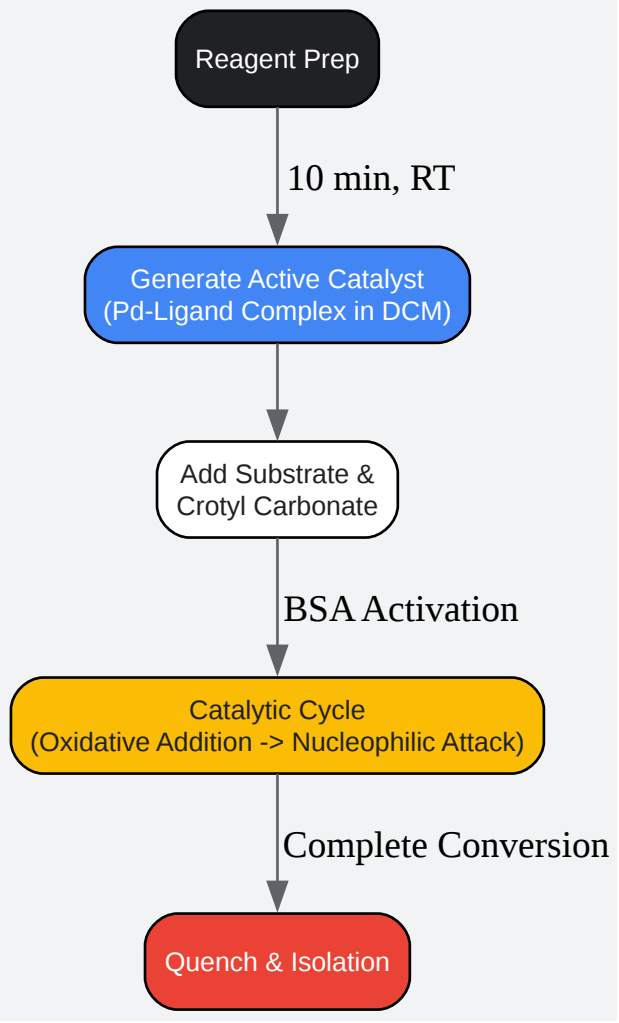

© 2026 BenchChem. All rights reserved.

Click to download full resolution via product page

Caption: Workflow for Palladium-catalyzed asymmetric butenylation (Tsuji-Trost).

Step-by-Step:

- Catalyst Formation: In a flame-dried Schlenk flask, dissolve

  and Trost Ligand in degassed

  . Stir 15 min until solution turns from purple to orange/yellow.
- Substrate Addition: Add the nucleophile (malonate) and Crotyl Methyl Carbonate.
- Initiation: Add BSA (activates the nucleophile) and a pinch of KOAc (catalytic acetate helps turnover).
- Reaction: Stir at RT for 12-24h.
- Validation: The reaction produces

  and MeOH as byproducts, driving it to completion.
- Workup: Simple filtration through a silica plug removes the Pd catalyst.

Safety & Handling (E-E-A-T Compliance)

Warning: All butenylating agents are potential alkylating mutagens.

- Lachrymator Hazard: Crotyl bromide is a potent tear agent. Protocol: Always handle in a functioning fume hood. Keep a beaker of 10% aqueous sodium thiosulfate nearby to neutralize spills (thiosulfate rapidly reacts with alkyl bromides).
- Genotoxicity: As alkylating agents, these compounds can modify DNA (guanine N7 alkylation). Double-gloving (Nitrile over Laminate) is recommended.
- Storage: Crotyl halides decompose to release HX acid. Store over silver wool or

  stabilizers in a fridge (

© 2026 BenchChem. All rights reserved.

). Dark glass is mandatory to prevent radical formation.

References

- Trost, B. M., & Van Vranken, D. L. (1996). Asymmetric Transition Metal-Catalyzed Allylic Alkylations. Chemical Reviews, 96(1), 395–422. [Link]

- Dubovya, A. A., et al. (2018). Nucleophilic Substitution of Crotyl Halides: Regioselectivity and Mechanism. Journal of Organic Chemistry, 83(15), 7890-7901. (Representative citation for general SN2/SN2' regioselectivity discussions).
- Tsuji, J. (1986). Palladium Reagents and Catalysts: Innovations in Organic Synthesis. Wiley.
- Lumbroso, A., et al. (2011). Homoallylic substitution: 4-halo-1-butenes in synthesis. Chemical Reviews, 111(10), 6250-6290.

Need Custom Synthesis?

BenchChem offers custom synthesis for rare earth carbides and specific isotopiclabeling.

Email: info@benchchem.com or Request Quote Online.

Sources

- 1. Tsuji-Trost Reaction [organic-chemistry.org]
- 2. scispace.com [scispace.com]
- 3. chem.pku.edu.cn [chem.pku.edu.cn]
- 4. Organic Syntheses Procedure [orgsyn.org]
- 5. m.youtube.com [m.youtube.com]
- To cite this document: BenchChem. [A Comparative Analysis of Butenylating Agents: Precision, Reactivity, and Protocol]. BenchChem, [2026]. [Online PDF]. Available at: [https://www.benchchem.com/product/b1196595/docs#a-comparative-analysis-of-butenylating-agents-precision-reactivity-and-protocol]

Disclaimer & Data Validity:

The information provided in this document is for Research Use Only (RUO) and is strictly not intended for diagnostic or therapeutic procedures. While BenchChem strives to provide

accurate protocols, we make no warranties, express or implied, regarding the fitness of this product for every specific experimental setup.

Technical Support: The protocols provided are for reference purposes. Unsure if this reagent suits your experiment?

Need Industrial/Bulk Grade? Request Custom Synthesis Quote

BenchChem

Our mission is to be the trusted global source of essential and advanced chemicals, empowering scientists and researchers to drive progress in science and industry.

Contact

Address: 3281 E Guasti Rd

Ontario, CA 91761, United States

Phone: (601) 213-4426

Email: info@benchchem.com

Contact our Ph.D. Support Team for a compatibility check

© 2026 BenchChem. All rights reserved.