Technical Support Center: Overcoming NV03 Resistance

Author: BenchChem Technical Support Team. **Date**: April 2026

Compound of Interest

Compound Name:	*NV03*
Cat. No.:	*B1193381*

Get Quote

This technical support center provides researchers, scientists, and drug development professionals with comprehensive troubleshooting guides and frequently asked questions (FAQs) to address challenges encountered during experiments with **NV03** resistance in cancer cell lines.

Frequently Asked Questions (FAQs)

Q1: What are the common mechanisms of acquired resistance to **NV03**?

A1: While the specific mechanisms of resistance to **NV03** can be cell-line dependent, several general mechanisms of drug resistance in cancer have been identified.[1][2] Acquired resistance to targeted therapies like **NV03** often involves alterations in the drug's target, activation of bypass signaling pathways, or changes in drug metabolism.[1][3] Key mechanisms may include:

- Target Alteration: Mutations in the **NV03** target protein that prevent effective drug binding.
- Bypass Pathway Activation: Upregulation of alternative signaling pathways that promote cell survival and proliferation, rendering the inhibition of the primary **NV03** target ineffective.[4] Common bypass pathways include the RAS-MAPK and PI3K-mTOR signaling cascades.[4]

© 2026 BenchChem. All rights reserved.

- Increased Drug Efflux: Overexpression of ATP-binding cassette (ABC) transporters, which actively pump **NV03** out of the cell, reducing its intracellular concentration.[3]
- Enhanced DNA Repair: For drugs that induce DNA damage, cancer cells can enhance their DNA repair mechanisms to survive treatment.[2]
- Inhibition of Apoptosis: Alterations in apoptotic signaling pathways that make cells resistant to programmed cell death induced by **NV03**.[2]

Q2: How long does it typically take to develop an **NV03**-resistant cancer cell line in vitro?

A2: The timeline for developing a drug-resistant cell line can vary significantly depending on the cell line, the concentration of **NV03** used, and the selection strategy. The process can take anywhere from 3 to 18 months.[5] Continuous exposure to incrementally increasing concentrations of **NV03** is a common method.[6]

Q3: My **NV03**-resistant cell line shows cross-resistance to other drugs. Is this expected?

A3: Yes, cross-resistance is a common phenomenon. The mechanisms conferring resistance to **NV03**, such as the overexpression of drug efflux pumps, can also provide resistance to other structurally or functionally unrelated drugs.[7] For example, the upregulation of certain ABC transporters is a well-known mechanism of multidrug resistance.[3]

Troubleshooting Guide

© 2026 BenchChem. All rights reserved.

Issue	Possible Cause	Recommended Solution
Failure to establish an NV03-resistant cell line.	The starting concentration of NV03 is too high, leading to excessive cell death.	Begin with a lower dose of NV03, such as the GI50 (the concentration that causes 50% growth inhibition), and gradually increase the concentration every 2-3 weeks.[8]
The parental cell line has a very low intrinsic sensitivity to NV03.	Screen a panel of cancer cell lines to identify one with a suitable initial sensitivity to NV03 before initiating the resistance development protocol.	
The experimental timeframe is too short.	Be aware that developing drug resistance can be a lengthy process, potentially taking several months.[6]	
Loss of NV03 resistance in the developed cell line over time.	The selective pressure (NV03 treatment) has been removed, allowing sensitive cells to outgrow the resistant population.	Maintain the resistant cell line in a culture medium containing a maintenance concentration of NV03 to ensure continued selective pressure.
The resistant phenotype is unstable.	Regularly verify the IC50 of the resistant cell line to monitor its level of resistance. Consider re-cloning the resistant population to isolate a stably resistant clone.	
High variability in experimental results with the NV03-resistant cell line.	Inconsistent cell seeding density.	Optimize and standardize the initial cell seeding density to ensure uniform cell growth during assays.[9]

© 2026 BenchChem. All rights reserved.

Manual pipetting errors.	Utilize automated liquid handling systems for dispensing cells and drugs to improve reproducibility and minimize manual errors.[9]
The resistant cell line is a heterogeneous population.	Perform single-cell cloning to establish a homogenous population of NV03-resistant cells.

Experimental Protocols

Protocol 1: Development of an **NV03**-Resistant Cancer Cell Line

This protocol describes a method for generating an **NV03**-resistant cancer cell line by continuous exposure to escalating drug concentrations.[6][10]

Materials:

- Parental cancer cell line of interest
- Complete cell culture medium
- **NV03** (dissolved in a suitable solvent, e.g., DMSO)
- 96-well plates
- Cell counting solution (e.g., trypan blue)
- Hemocytometer or automated cell counter

Procedure:

- Determine the initial sensitivity (IC50) of the parental cell line to **NV03**:
  - Seed the parental cells in 96-well plates at a predetermined optimal density.[9]

© 2026 BenchChem. All rights reserved.

- The following day, treat the cells with a serial dilution of **NV03**. Include a vehicle control (e.g., DMSO).[6]
- After a 72-hour incubation, assess cell viability using a suitable assay (e.g., MTT, CellTiter-Glo).
- Calculate the IC50 value using non-linear regression analysis.[6]

- Initiate resistance development:
  - Culture the parental cells in a medium containing **NV03** at a concentration equal to the IC50.
  - Initially, a significant portion of the cells may die. Allow the surviving cells to repopulate the culture vessel.
  - Once the cells are growing steadily at this concentration, gradually increase the concentration of **NV03** in the culture medium. A stepwise increase of 1.5 to 2-fold is a common strategy.
  - At each concentration step, allow the cells to adapt and resume a stable growth rate before the next increase.

- Monitoring and Characterization:
  - Periodically determine the IC50 of the adapting cell population to monitor the development of resistance.
  - A significant increase in the IC50 value (e.g., >10-fold) compared to the parental cell line indicates the successful establishment of an **NV03**-resistant line.[6]
  - Cryopreserve cell stocks at various stages of resistance development.[6]

Protocol 2: Characterization of **NV03** Resistance - IC50 Determination

This protocol details the procedure for measuring the 50% inhibitory concentration (IC50) to quantify the level of resistance.

© 2026 BenchChem. All rights reserved.

Materials:

- **NV03**-sensitive (parental) and **NV03**-resistant cancer cell lines
- Complete cell culture medium
- **NV03**
- 96-well plates
- Cell viability assay reagent (e.g., Resazurin)

Procedure:

- Cell Seeding:
  - Harvest and count both parental and resistant cells.
  - Seed the cells into separate 96-well plates at their optimal seeding density in 100 µL of medium.
- Drug Treatment:
  - Prepare a 1:4 serial dilution of **NV03** in DMSO at 200x the final concentration.[8]
  - Prepare an intermediate plate by diluting the 200x drug plate 1:10 in cell culture medium to create a 10x drug solution.[8]
  - Add 10 µL of the 10x drug-medium mix to the corresponding wells of the cell plates in triplicate.[8]
- Incubation:
  - Incubate the plates for 72 hours under standard cell culture conditions.
- Cell Viability Assessment:
  - Add the cell viability reagent to each well according to the manufacturer's instructions.

© 2026 BenchChem. All rights reserved.

- Measure the absorbance or fluorescence using a plate reader.

- Data Analysis:
  - Normalize the data to the vehicle-treated control cells.
  - Plot the dose-response curves and calculate the IC50 values for both the parental and resistant cell lines using a suitable software package.

Quantitative Data Summary

Table 1: Hypothetical IC50 Values for Parental and **NV03**-Resistant Cell Lines

Cell Line	NV03 IC50 (µM)	Drug A IC50 (µM)	Drug B IC50 (µM)	Resistance Factor (NV03)
Parental	0.5	1.2	2.5	1
NV03-Resistant	15.0	18.5	2.8	30

Resistance Factor = IC50 (Resistant) / IC50 (Parental)

Visualizations

© 2026 BenchChem. All rights reserved.

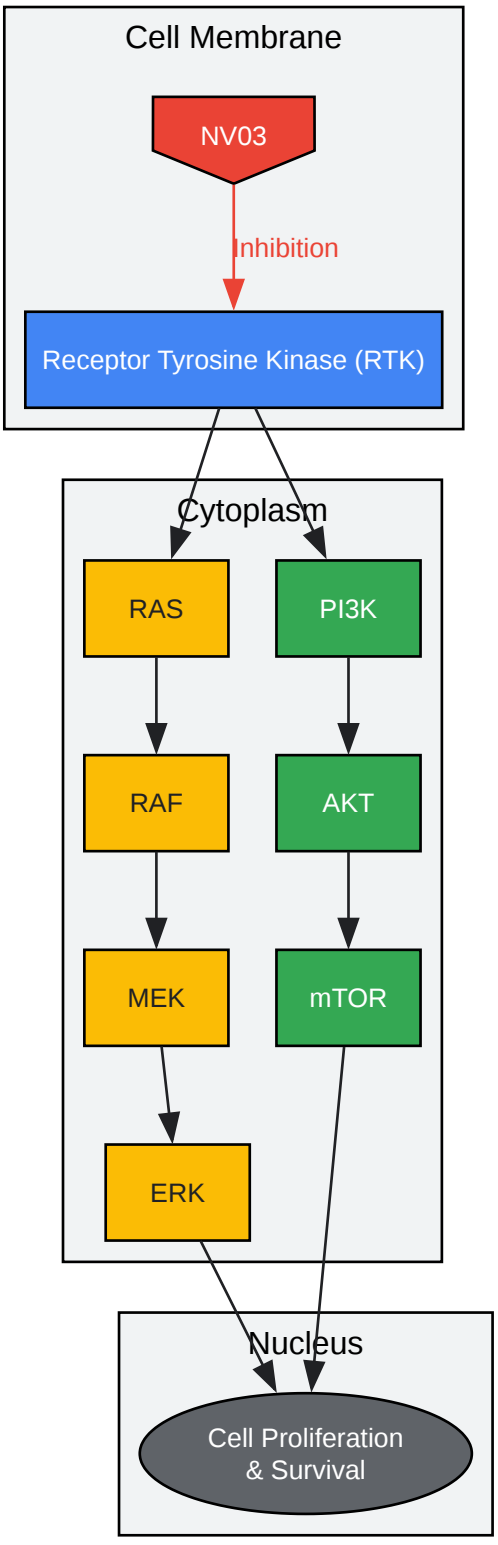

Click to download full resolution via product page

© 2026 BenchChem. All rights reserved.

Caption: A simplified diagram of a generic RTK signaling pathway that can be implicated in **NV03** action and resistance.

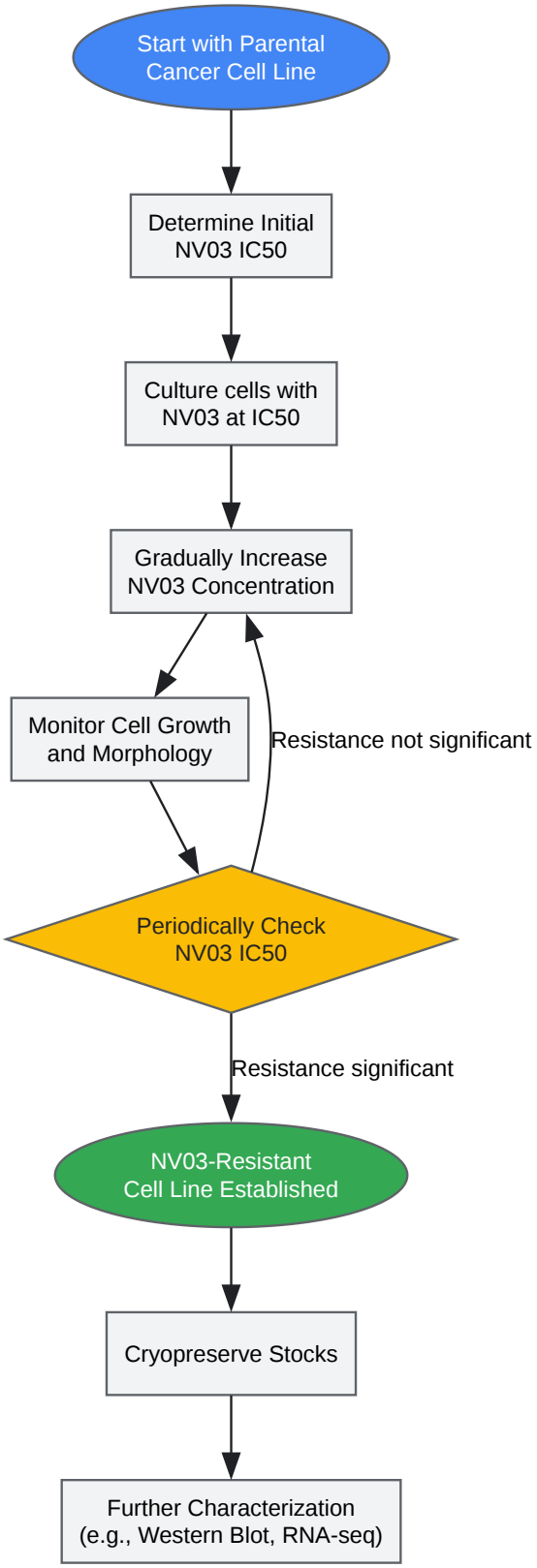

© 2026 BenchChem. All rights reserved.

Click to download full resolution via product page

Caption: Experimental workflow for the development of **NV03**-resistant cancer cell lines.

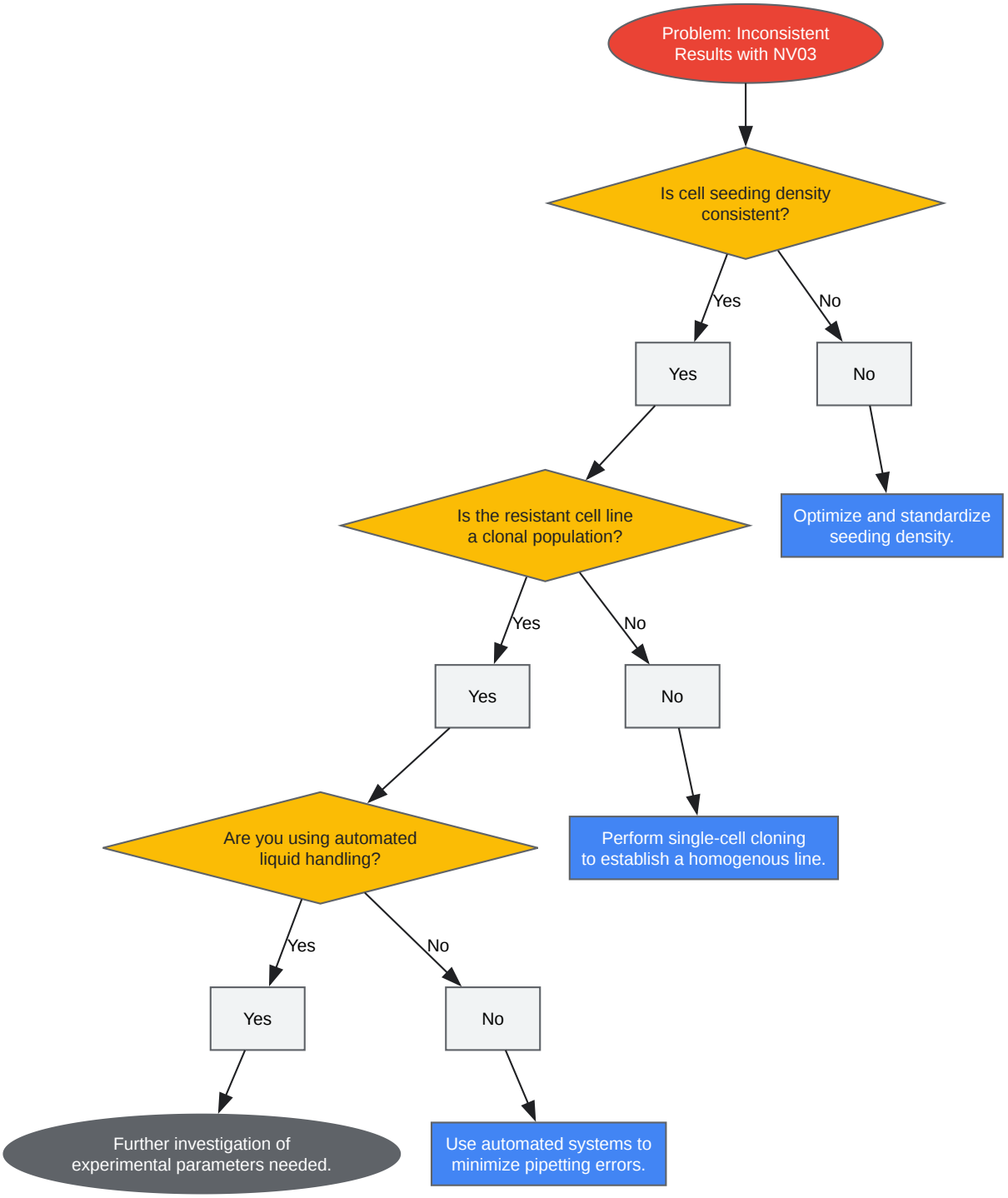

© 2026 BenchChem. All rights reserved.

Click to download full resolution via product page

Caption: A decision tree for troubleshooting inconsistent experimental results with **NV03**.

Need Custom Synthesis?

BenchChem offers custom synthesis for rare earth carbides and specific isotopiclabeling.

Email: info@benchchem.com or Request Quote Online.

References

- 1. Understanding and targeting resistance mechanisms in cancer - PMC [pmc.ncbi.nlm.nih.gov]
- 2. The Different Mechanisms of Cancer Drug Resistance: A Brief Review - PMC [pmc.ncbi.nlm.nih.gov]
- 3. Drug-adapted cancer cell lines as preclinical models of acquired resistance - PMC [pmc.ncbi.nlm.nih.gov]
- 4. Systematic identification of signaling pathways with potential to confer anticancer drug resistance - PMC [pmc.ncbi.nlm.nih.gov]
- 5. researchgate.net [researchgate.net]
- 6. Development of Drug-resistant Cell Lines for Experimental Procedures - PMC [pmc.ncbi.nlm.nih.gov]
- 7. Development of Drug-Resistant Models | Springer Nature Experiments [experiments.springernature.com]
- 8. Implementation of In Vitro Drug Resistance Assays: Maximizing the Potential for Uncovering Clinically Relevant Resistance Mechanisms [jove.com]
- 9. Measuring Cancer Drug Sensitivity and Resistance in Cultured Cells - PMC [pmc.ncbi.nlm.nih.gov]
- 10. blog.crownbio.com [blog.crownbio.com]
- To cite this document: BenchChem. [Technical Support Center: Overcoming NV03 Resistance]. BenchChem, [2026]. [Online PDF]. Available at: [https://www.benchchem.com/product/b1193381/docs#technical-support-center-overcoming-nv03-resistance]

Disclaimer & Data Validity:

The information provided in this document is for Research Use Only (RUO) and is strictly not intended for diagnostic or therapeutic procedures. While BenchChem strives to provide accurate protocols, we make no warranties, express or implied, regarding the fitness of this product for every specific experimental setup.

Technical Support: The protocols provided are for reference purposes. Unsure if this reagent suits your experiment?

Need Industrial/Bulk Grade? Request Custom Synthesis Quote

BenchChem

Our mission is to be the trusted global source of essential and advanced chemicals, empowering scientists and researchers to drive progress in science and industry.

Contact

Address: 3281 E Guasti Rd

Ontario, CA 91761, United States

Phone: (601) 213-4426

Email: info@benchchem.com

Contact our Ph.D. Support Team for a compatibility check

© 2026 BenchChem. All rights reserved.