Application Notes and Protocols: PLX7486 in Combination with Immunotherapy

Author: BenchChem Technical Support Team. **Date**: April 2026

Compound of Interest

Compound Name:	*PLX7486*
Cat. No.:	*B1193435*

Get Quote

For Researchers, Scientists, and Drug Development Professionals

Introduction

PLX7486 is an orally bioavailable small molecule that acts as a selective dual inhibitor of the receptor tyrosine kinases (RTKs) Colony-Stimulating Factor-1 Receptor (CSF1R) and Tropomyosin receptor kinases (TrkA, TrkB, and TrkC).[1][2][3] By binding to and inhibiting the activity of these kinases, **PLX7486** disrupts signaling pathways that are often upregulated in various cancer types, thereby potentially halting tumor cell proliferation.[1][2] Its unique dual-targeting mechanism presents a compelling rationale for combination with immunotherapy to enhance anti-tumor immune responses.

The tumor microenvironment (TME) often presents a significant barrier to effective immunotherapy.[4] Tumors can evade immune destruction by creating an immunosuppressive milieu, partly through the secretion of cytokines like Colony-Stimulating Factor-1 (CSF-1).[4][5] CSF-1 binds to CSF1R on myeloid cells, promoting the proliferation and recruitment of immunosuppressive cells such as M2-polarized macrophages and myeloid-derived suppressor cells (MDSCs) into the TME.[4][5] These cells actively suppress the function of cytotoxic T-cells.

© 2026 BenchChem. All rights reserved.

Simultaneously, neurotrophins, which are ligands for the Trk family of receptors, can regulate tumor growth, and Trk receptors are overexpressed in many cancers, including melanoma.[4] **PLX7486**'s ability to target Trk receptors directly on cancer cells provides a direct anti-proliferative effect.

The primary rationale for combining **PLX7486** with immunotherapy, such as immune checkpoint inhibitors (ICIs), is its ability to remodel the TME. By inhibiting CSF1R, **PLX7486** can deplete tumor-associated macrophages (TAMs) and other immunosuppressive myeloid cells, thereby alleviating a major mechanism of immune suppression.[4][6] This action is hypothesized to render the TME more permissive to T-cell infiltration and activity, synergizing with ICIs that work to "release the brakes" on T-cells, leading to a more robust and durable anti-tumor effect.[4]

Data Presentation

Table 1: In Vitro Cytotoxicity of PLX7486

Cell Line Type	Example Cell Lines	IC50 Value (72 hr)	Downstream Pathway Inhibited
Murine Cancer	MC38, SA1N, MB49, 4T1, B16F10, 3LL	5-8 µM	AKT[4]
Murine Macrophage	RAW264.7, Bone Marrow-Derived Macrophages	<1 µM	MAPK[4]

Table 2: Preclinical In Vivo Efficacy of PLX7486 Combination Therapy

© 2026 BenchChem. All rights reserved.

Tumor Model	Combination Therapy	Key Findings
MC38 & B16F10 (mouse)	PLX7486 + anti-CTLA-4 / anti-PD-1	Superior anti-tumor effect compared to single-agent treatments.[4]
B16F10 Melanoma (mouse)	PLX7486 (20mg/kg daily) + Adoptive T-cell Transfer	Increased pmel-1/Thy1.1+ T-cells in the spleen (Vehicle: 1.76±0.2%, PLX7486: 3.52±0.4%).[4]
Sonic Hedgehog Medulloblastoma (mouse)	PLX7486	Prolonged mouse survival, reduced tumor size, and diminished infiltration of a subset of TAMs.[6]
Sonic Hedgehog Medulloblastoma (mouse)	PLX7486	Significant reduction in CD45int TAMs and an increase in the percentage of CD8 T cells in tumors.[6]

Signaling Pathways and Experimental Workflows

© 2026 BenchChem. All rights reserved.

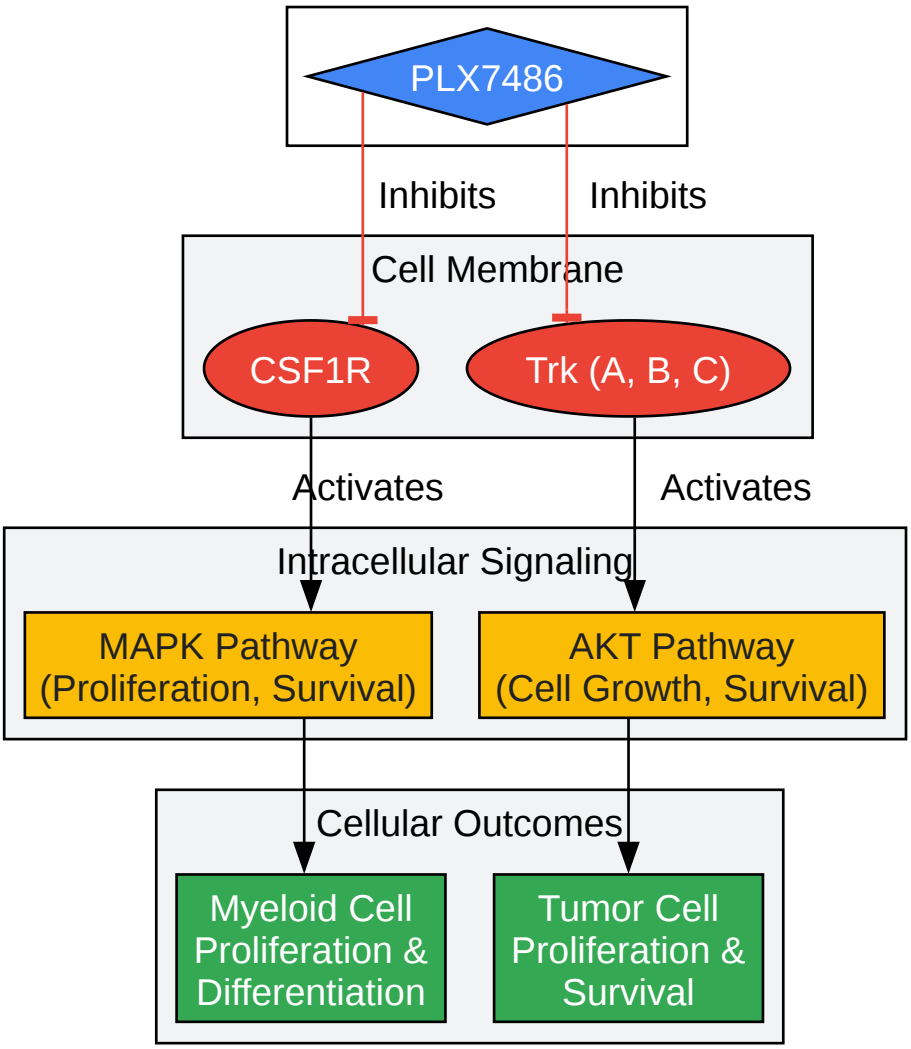

Click to download full resolution via product page

Caption: **PLX7486** dual-inhibits CSF1R and Trk receptors.

© 2026 BenchChem. All rights reserved.

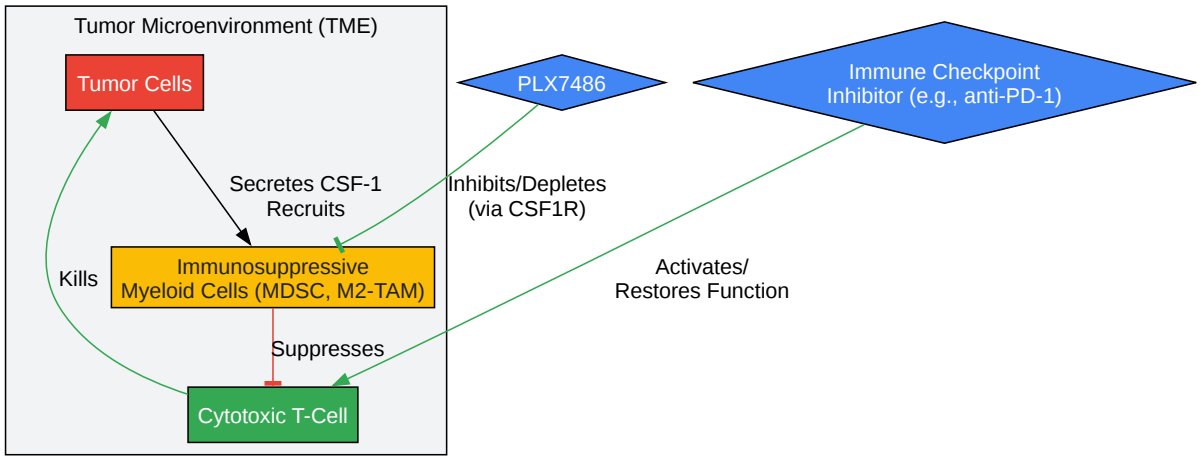

Click to download full resolution via product page

Caption: **PLX7486** remodels the TME to enhance immunotherapy.

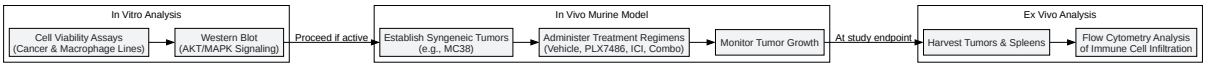

Click to download full resolution via product page

Need Custom Synthesis?

BenchChem offers custom synthesis for rare earth carbides and specific isotopiclabeling.

Email: info@benchchem.com or Request Quote Online.

© 2026 BenchChem. All rights reserved.

References

- 1. Facebook [cancer.gov]
- 2. medkoo.com [medkoo.com]
- 3. ecmcnetwork.org.uk [ecmcnetwork.org.uk]
- 4. aacrjournals.org [aacrjournals.org]
- 5. Inhibition of CSF1 Receptor Improves the Anti-tumor Efficacy of Adoptive Cell Transfer Immunotherapy - PMC [pmc.ncbi.nlm.nih.gov]
- 6. CSF1R Inhibition Depletes Tumor-Associated Macrophages and Attenuates Tumor Progression in a Mouse Sonic Hedgehog-Medulloblastoma Model - PMC [pmc.ncbi.nlm.nih.gov]
- To cite this document: BenchChem. [Application Notes and Protocols: PLX7486 in Combination with Immunotherapy]. BenchChem, [2026]. [Online PDF]. Available at: [https://www.benchchem.com/product/b1193435/docs#application-notes-and-protocols-plx7486-in-combination-with-immunotherapy]

Disclaimer & Data Validity:

The information provided in this document is for Research Use Only (RUO) and is strictly not intended for diagnostic or therapeutic procedures. While BenchChem strives to provide accurate protocols, we make no warranties, express or implied, regarding the fitness of this product for every specific experimental setup.

Technical Support: The protocols provided are for reference purposes. Unsure if this reagent suits your experiment?

Need Industrial/Bulk Grade? Request Custom Synthesis Quote

© 2026 BenchChem. All rights reserved.

BenchChem

Our mission is to be the trusted global source of essential and advanced chemicals, empowering scientists and researchers to drive progress in science and industry.

Contact

Address: 3281 E Guasti Rd

Ontario, CA 91761, United States

Phone: (601) 213-4426

Email: info@benchchem.com

Contact our Ph.D. Support Team for a compatibility check

© 2026 BenchChem. All rights reserved.