Technical Support Center: Optimizing Hu7691 Concentration for Cell Viability Assays

Author: BenchChem Technical Support Team. **Date**: April 2026

Compound of Interest

Compound Name: *Hu7691 free base*

Cat. No.: *B11928636*

Get Quote

This technical support center provides troubleshooting guides and frequently asked questions (FAQs) to assist researchers in optimizing the concentration of Hu7691 for cell viability assays.

Frequently Asked Questions (FAQs)

Q1: What is Hu7691 and what is its mechanism of action?

A1: Hu7691 is a novel, potent, and selective pan-Akt kinase inhibitor.[1][2][3] It functions by targeting all three isoforms of the Akt (also known as Protein Kinase B), a key signaling node in the PI3K/Akt/mTOR pathway.[4][5] This pathway is crucial for regulating cell growth, proliferation, survival, and metabolism.[5][6] By inhibiting Akt, Hu7691 can suppress the proliferation of various tumor cell lines and induce cell differentiation.[7]

Q2: What is a good starting concentration range for Hu7691 in a cell viability assay?

A2: Based on published data, a broad concentration range from 0.1 µM to 100 µM is a reasonable starting point for an initial dose-response experiment. For neuroblastoma cell lines, IC50 values (the concentration that inhibits 50% of cell viability) have been reported to be in the range of 2.73 to 18.0 µM after 72 hours of treatment.[8] Therefore, for these and other sensitive

© 2026 BenchChem. All rights reserved.

cell lines, a more focused range between 1 µM and 20 µM may be appropriate for subsequent experiments.

Q3: What is the recommended incubation time for Hu7691 treatment in cell viability assays?

A3: An incubation time of 72 hours has been effectively used to determine the IC50 values of Hu7691 in neuroblastoma cell lines.[8] However, the optimal incubation time can vary depending on the cell line and the specific biological question. It is recommended to perform a time-course experiment (e.g., 24, 48, and 72 hours) to determine the ideal duration for your specific experimental setup.[9][10][11]

Q4: How can I confirm that Hu7691 is inhibiting Akt in my cells?

A4: To confirm the on-target activity of Hu7691, you can perform a Western blot analysis to assess the phosphorylation status of downstream targets of Akt. A decrease in the phosphorylation of proteins such as GSK3β (at Ser9), PRAS40 (at Thr246), and FOXO1 is indicative of Akt inhibition.[1][8][12] It's important to note that inhibition of the Akt pathway can sometimes lead to a feedback mechanism that increases the phosphorylation of Akt itself, so monitoring downstream effectors is crucial.[8]

Q5: What are potential off-target effects of Hu7691?

A5: While Hu7691 is described as a selective Akt inhibitor, like many small molecules, it may have off-target effects, especially at higher concentrations.[12][13] To mitigate this, it is important to use the lowest effective concentration and include proper controls in your experiments. Consider using a structurally unrelated Akt inhibitor as a positive control to ensure the observed phenotype is due to Akt inhibition.

Troubleshooting Guide

© 2026 BenchChem. All rights reserved.

Issue	Potential Cause	Recommended Action
High variability between replicates	Inconsistent cell seeding, pipetting errors, or edge effects in the plate.	Ensure a homogenous cell suspension before seeding. Use a multichannel pipette for consistency. To avoid edge effects, do not use the outer wells of the plate for experimental samples; instead, fill them with sterile PBS or media.
No significant decrease in cell viability	Hu7691 concentration is too low, incubation time is too short, or the cell line is resistant.	Increase the concentration range of Hu7691. Extend the incubation time (e.g., up to 96 hours). Consider that your cell line may have intrinsic or acquired resistance to Akt inhibitors.[14][15]
Cell viability is greater than 100% at low concentrations	This can be an artifact of the assay or indicate a hormetic effect where low doses of a substance are stimulatory.	Re-evaluate your vehicle control. Ensure the final DMSO concentration is consistent across all wells and is not affecting cell growth. If the effect is reproducible, it may be a biological phenomenon worth investigating further.
Discrepancy between different viability assays (e.g., MTT vs. cell counting)	Hu7691 may interfere with cellular metabolism, affecting assays like MTT that rely on mitochondrial reductase activity.	Use a non-metabolic based assay for viability, such as Trypan Blue exclusion or a CyQUANT assay that measures DNA content, to validate your results.
Cells appear differentiated but viability remains high	Hu7691 can induce cell cycle arrest and differentiation in some cell types, such as neuroblastoma cells, without	In addition to viability assays, consider performing cell cycle analysis (e.g., by flow cytometry) or staining for

© 2026 BenchChem. All rights reserved.

	causing significant cell death. [7]	differentiation markers to fully characterize the cellular response to Hu7691.
Acquired resistance to Hu7691	Prolonged exposure to Akt inhibitors can lead to resistance through mechanisms such as upregulation of other Akt isoforms (e.g., AKT3) or activation of parallel signaling pathways (e.g., PIM kinases). [14][15][16][17]	If resistance develops, consider combination therapies. For example, resistance to some Akt inhibitors can be overcome by co-treatment with inhibitors of the compensatory pathways. [14]

Data Presentation

Table 1: IC50 Values of Hu7691 in Human Neuroblastoma Cell Lines after 72-hour Treatment

Cell Line	MYCN Amplification	IC50 (μM)
Neuro2a	Amplified	~2.73
IMR-32	Amplified	~10.0
SK-N-BE(2)	Amplified	~5.0
SK-N-DZ	Amplified	~18.0
CHP-126	Amplified	~3.5
SK-N-SH	Non-amplified	~12.5
Data synthesized from publicly available research.[8]		

Experimental Protocols

General Protocol for Determining IC50 of Hu7691 using a Cell Viability Assay (e.g., MTT, XTT, CCK-8)

© 2026 BenchChem. All rights reserved.

This protocol provides a general framework. Specific details may need to be optimized for your cell line and assay of choice.

Materials:

- Cell line of interest
- Complete cell culture medium
- Hu7691 stock solution (e.g., 10 mM in DMSO)
- 96-well cell culture plates
- Selected cell viability assay reagent (MTT, XTT, or CCK-8)
- Solubilization buffer (for MTT assay, e.g., DMSO or 0.01 M HCl in 10% SDS)
- Phosphate-Buffered Saline (PBS)
- Multichannel pipette
- Microplate reader

Procedure:

- Cell Seeding:
  - Trypsinize and count cells.
  - Seed cells in a 96-well plate at a predetermined optimal density (typically 5,000-10,000 cells/well) in 100 µL of complete medium.
  - Incubate for 24 hours at 37°C and 5% CO_2 to allow for cell attachment.
- Compound Preparation and Treatment:
  - Prepare a serial dilution of Hu7691 in complete cell culture medium. A common starting range is a 10-point, 2-fold serial dilution starting from 100 µM.

© 2026 BenchChem. All rights reserved.

- Include a vehicle control (medium with the same final concentration of DMSO as the highest Hu7691 concentration) and a no-treatment control (medium only). Also include a "no-cell" blank control (medium only, no cells).
- Carefully remove the medium from the wells and add 100 µL of the prepared Hu7691 dilutions or controls.
- Incubate for the desired treatment duration (e.g., 72 hours).

- Cell Viability Assay:
  - For MTT Assay:
    - Add 10 µL of MTT reagent (5 mg/mL in PBS) to each well.
    - Incubate for 2-4 hours at 37°C.
    - Carefully remove the medium and add 100 µL of solubilization solution to each well to dissolve the formazan crystals.
    - Mix thoroughly by pipetting or using a plate shaker.
  - For XTT Assay:
    - Prepare the XTT working solution according to the manufacturer's instructions.
    - Add 50 µL of the working solution to each well.
    - Incubate for 2-4 hours at 37°C.
  - For CCK-8 Assay:
    - Add 10 µL of CCK-8 solution to each well.
    - Incubate for 1-4 hours at 37°C.
- Data Acquisition and Analysis:

© 2026 BenchChem. All rights reserved.

- Measure the absorbance at the appropriate wavelength using a microplate reader (e.g., 570 nm for MTT, 450 nm for XTT and CCK-8).
- Subtract the average absorbance of the "no-cell" blank from all other wells.
- Normalize the data to the vehicle control by setting the average absorbance of the vehicle control wells to 100% viability.
- Plot the normalized viability against the logarithm of the Hu7691 concentration and fit a non-linear regression curve (e.g., sigmoidal dose-response) to determine the IC50 value.

Visualizations

© 2026 BenchChem. All rights reserved.

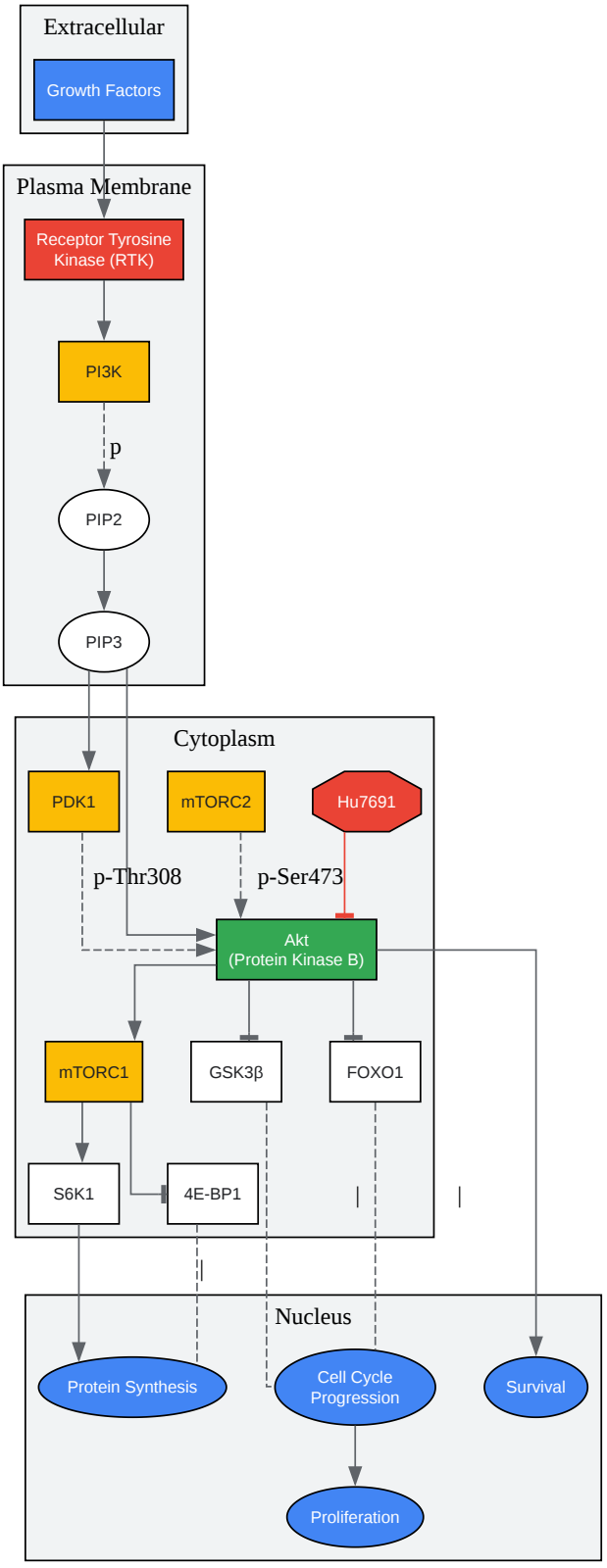

Click to download full resolution via product page

Caption: PI3K/Akt/mTOR Signaling Pathway and the inhibitory action of Hu7691.

© 2026 BenchChem. All rights reserved.

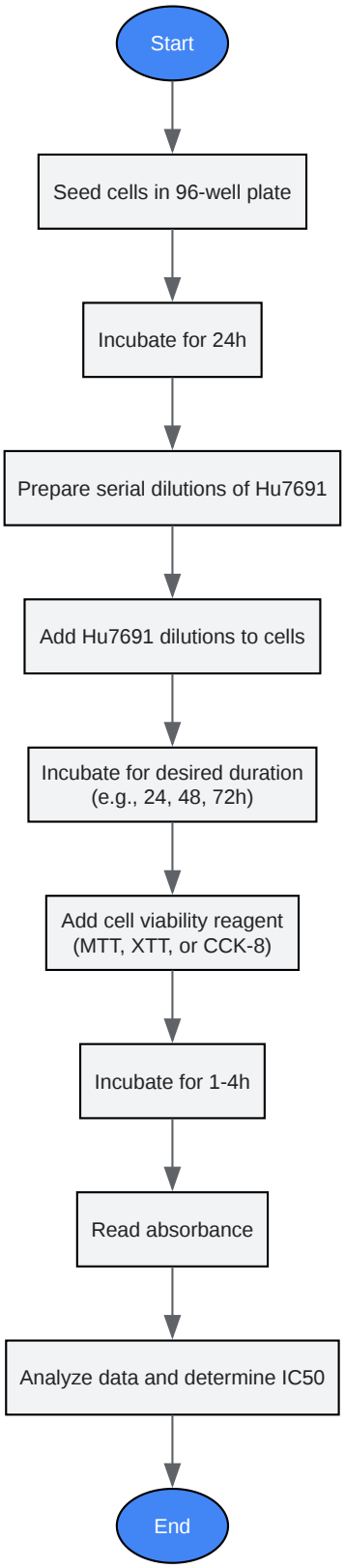

Click to download full resolution via product page

Caption: Experimental workflow for optimizing Hu7691 concentration.

© 2026 BenchChem. All rights reserved.

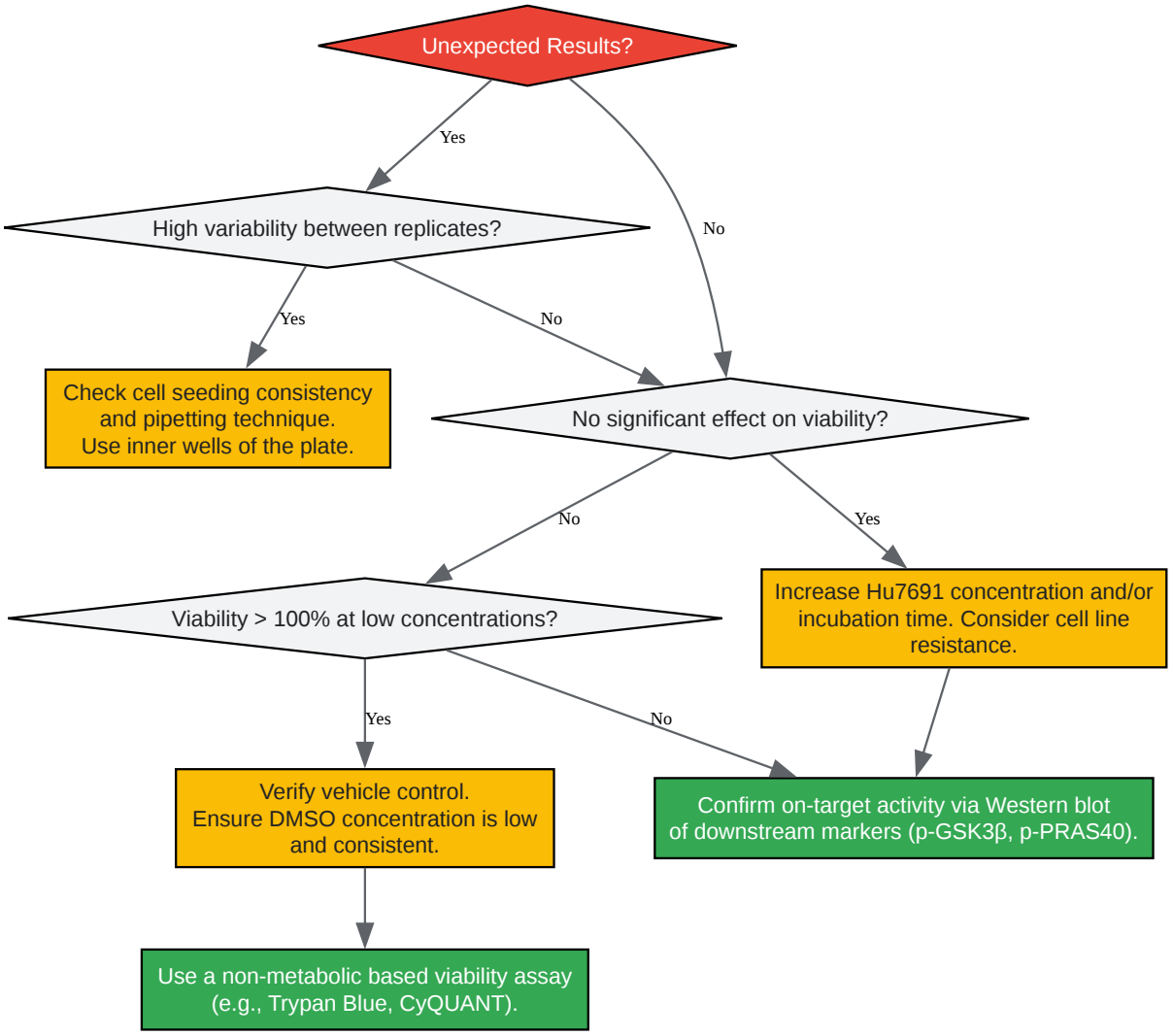

Click to download full resolution via product page

Caption: Troubleshooting decision tree for unexpected results.

Need Custom Synthesis?

BenchChem offers custom synthesis for rare earth carbides and specific isotopiclabeling.

Email: info@benchchem.com or Request Quote Online.

References

- 1. aacrjournals.org [aacrjournals.org]
- 2. Safety and Toxicology Study of Hu7691, a Novel AKT Inhibitor, following Oral Administration in Rats - PMC [pmc.ncbi.nlm.nih.gov]
- 3. Safety and Toxicology Study of Hu7691, a Novel AKT Inhibitor, following Oral Administration in Rats - PubMed [pubmed.ncbi.nlm.nih.gov]
- 4. PI3K/AKT/mTOR pathway - Wikipedia [en.wikipedia.org]
- 5. Frontiers | PI3K/Akt/mTOR Pathway and Its Role in Cancer Therapeutics: Are We Making Headway? [frontiersin.org]
- 6. Targeting the PI3-kinase/Akt/mTOR Signaling Pathway - PMC [pmc.ncbi.nlm.nih.gov]
- 7. AKT inhibitor Hu7691 induces differentiation of neuroblastoma cells - PubMed [pubmed.ncbi.nlm.nih.gov]
- 8. AKT inhibitor Hu7691 induces differentiation of neuroblastoma cells - PMC [pmc.ncbi.nlm.nih.gov]
- 9. researchgate.net [researchgate.net]
- 10. d-nb.info [d-nb.info]
- 11. Relevance of the incubation period in cytotoxicity testing with primary human hepatocytes - PubMed [pubmed.ncbi.nlm.nih.gov]
- 12. Targeting AKT for cancer therapy - PMC [pmc.ncbi.nlm.nih.gov]
- 13. Akt inhibitors in cancer treatment: The long journey from drug discovery to clinical use (Review) - PMC [pmc.ncbi.nlm.nih.gov]
- 14. researchgate.net [researchgate.net]
- 15. UPREGULATION OF AKT3 CONFERS RESISTANCE TO AKT INHIBITOR MK2206 IN BREAST CANCER - PMC [pmc.ncbi.nlm.nih.gov]
- 16. Upregulation of Receptor Tyrosine Kinase Activity and Stemness as Resistance Mechanisms to Akt Inhibitors in Breast Cancer - PMC [pmc.ncbi.nlm.nih.gov]
- 17. mdpi.com [mdpi.com]

- To cite this document: BenchChem. [Technical Support Center: Optimizing Hu7691 Concentration for Cell Viability Assays]. BenchChem, [2026]. [Online PDF]. Available at: [https://www.benchchem.com/product/b11928636/docs#technical-support-center-optimizing-hu7691-concentration-for-cell-viability-assays]

© 2026 BenchChem. All rights reserved.

Disclaimer & Data Validity:

The information provided in this document is for Research Use Only (RUO) and is strictly not intended for diagnostic or therapeutic procedures. While BenchChem strives to provide accurate protocols, we make no warranties, express or implied, regarding the fitness of this product for every specific experimental setup.

Technical Support: The protocols provided are for reference purposes. Unsure if this reagent suits your experiment?

Need Industrial/Bulk Grade? Request Custom Synthesis Quote

BenchChem

Our mission is to be the trusted global source of essential and advanced chemicals, empowering scientists and researchers to drive progress in science and industry.

Contact

Address: 3281 E Guasti Rd

Ontario, CA 91761, United States

Phone: (601) 213-4426

Email: info@benchchem.com

Contact our Ph.D. Support Team for a compatibility check

© 2026 BenchChem. All rights reserved.