Common pitfalls in using NHS esters for bioconjugation

Author: BenchChem Technical Support Team. **Date**: April 2026

Compound of Interest

Compound Name: *Azido-PEG10-CH2CO2-NHS*

Cat. No.: *B11928296*

Get Quote

Technical Support Center: NHS Ester Bioconjugation

Welcome to the technical support center for NHS ester bioconjugation. This resource provides troubleshooting guides and frequently asked questions (FAQs) to help researchers, scientists, and drug development professionals overcome common challenges encountered during their experiments.

Frequently Asked Questions (FAQs)

Q1: What is the optimal pH for NHS ester bioconjugation reactions?

The optimal pH for NHS ester reactions is a compromise between ensuring the primary amine is sufficiently deprotonated to be nucleophilic and minimizing the hydrolysis of the NHS ester.[1] A pH range of 7.2 to 8.5 is generally recommended for most applications.[2] At a lower pH, the primary amines on your biomolecule will be protonated (-NH3+), making them poor nucleophiles and thus unreactive towards the NHS ester.[1][3] Conversely, at a higher pH, the rate of NHS ester hydrolysis increases significantly, which competes with the desired

© 2026 BenchChem. All rights reserved.

conjugation reaction and reduces efficiency.[2][4][5] For many proteins and peptides, a pH of 8.3-8.5 is considered optimal.[5]

Q2: My NHS ester reagent is not dissolving in my aqueous reaction buffer. What should I do?

Many non-sulfonated NHS esters have poor water solubility.[2] In these cases, the reagent should first be dissolved in a dry, water-miscible organic solvent such as dimethylformamide (DMF) or dimethyl sulfoxide (DMSO).[1][2][5] This stock solution can then be added to your aqueous reaction mixture. It is crucial to use high-quality, anhydrous, and amine-free solvents to prevent premature hydrolysis or reaction with the NHS ester.[6][7] When adding the organic solvent to your reaction, ensure the final concentration does not exceed a level that could denature your biomolecule, typically kept between 0.5% to 10%.[2]

Q3: Can I use Tris buffer for my NHS ester conjugation?

No, it is highly recommended to avoid buffers containing primary amines, such as Tris (tris(hydroxymethyl)aminomethane) or glycine.[2][8][9] These buffers will compete with your target biomolecule for reaction with the NHS ester, leading to low conjugation efficiency and the formation of undesired side products.[2][8] Suitable alternative buffers include phosphate-buffered saline (PBS), borate buffer, carbonate/bicarbonate buffer, and HEPES buffer.[2][5]

Q4: How should I store my NHS ester reagents?

NHS esters are sensitive to moisture and should be stored in a cool, dry place.[9][10] For long-term storage, it is recommended to store them at -20°C to -80°C in a desiccated environment.[6][9][11] Before opening a vial of NHS ester, it is critical to allow it to fully equilibrate to room temperature to prevent condensation of moisture onto the reagent, which would lead to hydrolysis.[6][9] If you frequently use small amounts of the reagent, it is good practice to aliquot the stock solution to avoid repeated opening and closing of the main container.[6]

Troubleshooting Guide

© 2026 BenchChem. All rights reserved.

Issue	Possible Cause	Recommended Solution
Low or No Conjugation	Hydrolyzed NHS Ester: The reagent may have been exposed to moisture during storage or handling.	Test the activity of your NHS ester reagent (see Protocol 2). If inactive, use a fresh vial. Always allow the reagent to warm to room temperature before opening.[6][9] Store under desiccated conditions.[6]
	Incorrect pH: The reaction pH may be too low, resulting in protonated, non-reactive amines.	Ensure the reaction buffer pH is between 7.2 and 8.5.[2] A pH of 8.3-8.5 is often optimal.[5]
	Presence of Competing Nucleophiles: The buffer or sample may contain primary amines (e.g., Tris, glycine, ammonium salts) or other nucleophiles.[2][8][12]	Perform a buffer exchange of your biomolecule into an amine-free buffer like PBS, HEPES, or borate buffer prior to conjugation.[8]
	Low Biomolecule Concentration: At low concentrations, the competing hydrolysis reaction is more significant.	Increase the concentration of your biomolecule in the reaction mixture.[4][13]
Poor Reproducibility	Inconsistent Reagent Preparation: NHS esters in aqueous solution are not stable and should be used immediately.	Always prepare fresh solutions of the NHS ester immediately before use.[5][9] Do not store NHS esters in aqueous stock solutions.
	Solvent Quality: If using an organic solvent like DMF, it may have degraded to form amines.	Use high-quality, anhydrous, amine-free DMF or DMSO.[5][7] Consider using N,N'-dimethylacetamide (DMA or DMAC) as a more stable alternative to DMF.[7]

© 2026 BenchChem. All rights reserved.

Protein Precipitation	High Concentration of Organic Solvent: The organic solvent used to dissolve the NHS ester may be denaturing the protein.	Keep the final concentration of the organic solvent in the reaction mixture as low as possible, ideally below 10%.[2]
Change in pH: The release of N-hydroxysuccinimide (NHS) during the reaction can lower the pH of a weakly buffered solution.[5]	Use a buffer with sufficient buffering capacity to maintain the desired pH throughout the reaction.	

Data Presentation

Table 1: Half-life of NHS Esters at Various pH and Temperature Conditions

pH	Temperature (°C)	Half-life
7.0	0	4-5 hours[2][4]
8.6	4	10 minutes[2][4]

Experimental Protocols

Protocol 1: General Procedure for Protein Labeling with an NHS Ester

- Buffer Exchange: Ensure your protein sample is in an amine-free buffer at a pH between 7.2 and 8.5 (e.g., 0.1 M phosphate buffer, 0.15 M NaCl, pH 7.2-7.5). If necessary, perform dialysis or use a desalting column to exchange the buffer.[8]
- Prepare Protein Solution: Adjust the concentration of the protein to be labeled to 1-10 mg/mL in the reaction buffer.[5]
- Prepare NHS Ester Solution: Immediately before use, dissolve the NHS ester in a suitable anhydrous organic solvent (e.g., DMSO or DMF) to a concentration of approximately 10 mM. [9]

© 2026 BenchChem. All rights reserved.

- Reaction: Add a 5- to 20-fold molar excess of the dissolved NHS ester to the protein solution.[9] Gently mix immediately. The final concentration of the organic solvent should not exceed 10% of the total reaction volume.[9]
- Incubation: Incubate the reaction at room temperature for 30-60 minutes or on ice for 2 hours.[9]
- Quenching (Optional): To stop the reaction, a small amount of an amine-containing buffer like Tris-HCl can be added to a final concentration of about 50 mM to consume any unreacted NHS ester.[2]
- Purification: Remove excess, unreacted labeling reagent and byproducts using a desalting column, dialysis, or size-exclusion chromatography.[5]

Protocol 2: Quick Qualitative Test for NHS Ester Activity

This protocol helps determine if an NHS ester reagent has been hydrolyzed and is no longer active. The principle is that the hydrolysis of the NHS ester releases N-hydroxysuccinimide (NHS), which absorbs light at 260 nm upon deprotonation in a basic solution.[2][14]

- Prepare Reagent Solution: Dissolve 1-2 mg of the NHS ester reagent in 2 mL of an appropriate buffer (e.g., PBS). If the reagent is not water-soluble, first dissolve it in 0.25 mL of DMSO or DMF and then add 2 mL of buffer.[14]
- Measure Initial Absorbance: Measure the absorbance of the reagent solution at 260 nm. If the absorbance is greater than 1.0, dilute the solution with more buffer until it is below 1.0 and record this value.[14]
- Base Hydrolysis: To 1 mL of the reagent solution, add 100 µL of 0.5-1.0 N NaOH. Vortex for 30 seconds.[14]
- Measure Final Absorbance: Promptly (within 1 minute) measure the absorbance of the base-hydrolyzed solution at 260 nm.[14]
- Interpretation:

© 2026 BenchChem. All rights reserved.

- Active Reagent: The absorbance of the base-hydrolyzed solution will be significantly greater than the initial absorbance.
- Inactive (Hydrolyzed) Reagent: There will be no significant increase in absorbance after adding NaOH.[14]

Visualizations

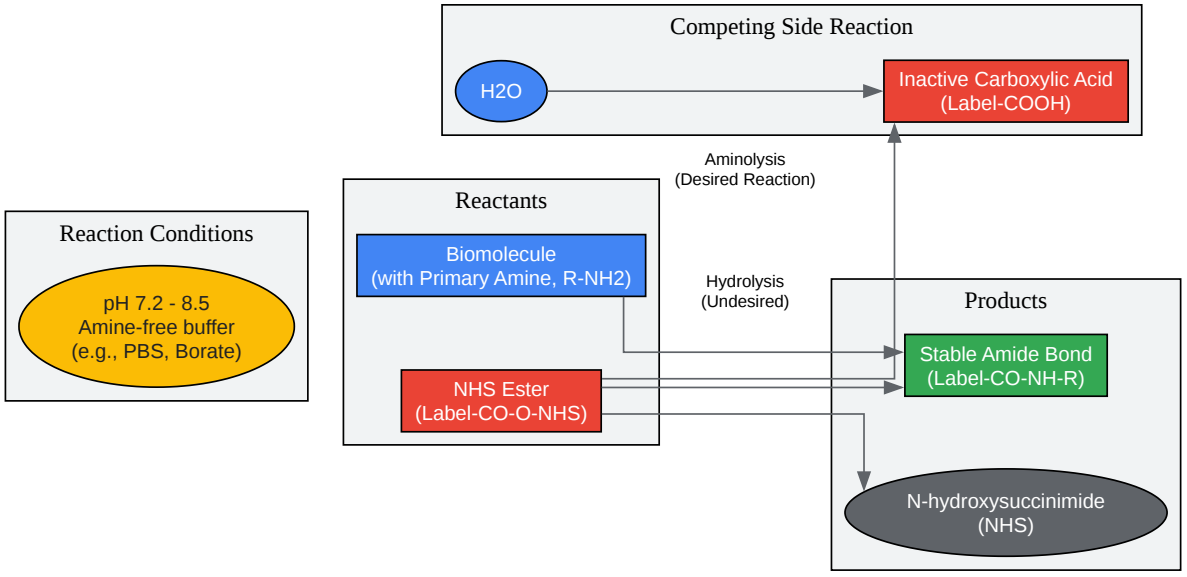

Click to download full resolution via product page

Caption: Reaction pathway for NHS ester bioconjugation.

© 2026 BenchChem. All rights reserved.

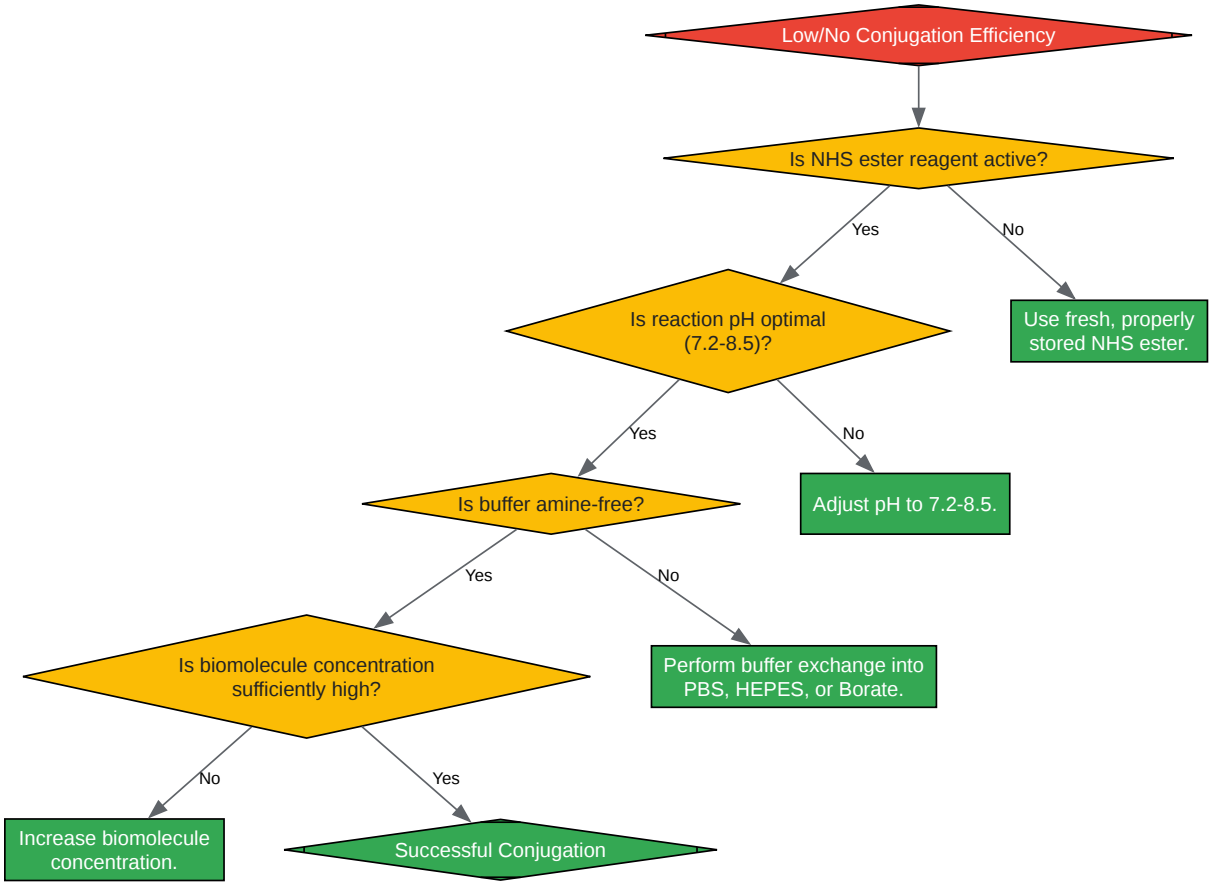

Click to download full resolution via product page

Caption: Troubleshooting workflow for low conjugation efficiency.

Need Custom Synthesis?

BenchChem offers custom synthesis for rare earth carbides and specific isotopiclabeling.

Email: info@benchchem.com or Request Quote Online.

References

- 1. benchchem.com [benchchem.com]
- 2. Amine-Reactive Crosslinker Chemistry | Thermo Fisher Scientific - HK [thermofisher.com]
- 3. Studying pH Dependence of a Peptide Modification with an N-hydroxysuccinimide Ester Using Mass Spectrometry — Journal of Young Investigators [jyi.org]
- 4. help.lumiprobe.com [help.lumiprobe.com]
- 5. lumiprobe.com [lumiprobe.com]
- 6. researchgate.net [researchgate.net]
- 7. researchgate.net [researchgate.net]
- 8. Troubleshooting Guides - Creative Biolabs [creative-biolabs.com]
- 9. broadpharm.com [broadpharm.com]
- 10. sigmaaldrich.com [sigmaaldrich.com]
- 11. NHS ester protocol for labeling proteins [abberior.rocks]
- 12. glenresearch.com [glenresearch.com]
- 13. bocsci.com [bocsci.com]
- 14. documents.thermofisher.com [documents.thermofisher.com]

- To cite this document: BenchChem. [Common pitfalls in using NHS esters for bioconjugation]. BenchChem, [2026]. [Online PDF]. Available at: [https://www.benchchem.com/product/b11928296/docs#common-pitfalls-in-using-nhs-esters-for-bioconjugation]

Disclaimer & Data Validity:

The information provided in this document is for Research Use Only (RUO) and is strictly not intended for diagnostic or therapeutic procedures. While BenchChem strives to provide accurate protocols, we make no warranties, express or implied, regarding the fitness of this product for every specific experimental setup.

Technical Support: The protocols provided are for reference purposes. Unsure if this reagent suits your experiment?

© 2026 BenchChem. All rights reserved.

Need Industrial/Bulk Grade? Request Custom Synthesis Quote

BenchChem

Our mission is to be the trusted global source of essential and advanced chemicals, empowering scientists and researchers to drive progress in science and industry.

Contact

Address: 3281 E Guasti Rd

Ontario, CA 91761, United States

Phone: (601) 213-4426

Email: info@benchchem.com

Contact our Ph.D. Support Team for a compatibility check

© 2026 BenchChem. All rights reserved.