Common pitfalls in DS-1205 related experiments and how to avoid them

Author: BenchChem Technical Support Team. **Date**: April 2026

Compound of Interest

Compound Name: *DS-1205*

Cat. No.: *B1192654*

Get Quote

Technical Support Center: DS-1205 Experiments

This technical support center provides troubleshooting guides and frequently asked questions (FAQs) for researchers utilizing **DS-1205** in their experiments. The information is tailored for scientists and drug development professionals working to understand and overcome resistance to EGFR tyrosine kinase inhibitors (TKIs) in non-small cell lung cancer (NSCLC).

Troubleshooting Guides

This section addresses specific issues that may arise during experiments involving **DS-1205**.

In Vitro Assays

© 2026 BenchChem. All rights reserved.

Question	Answer
Why am I seeing inconsistent results in my cell viability assays with DS-1205 and an EGFR-TKI?	Inconsistent results in viability assays can stem from several factors. Cell Line Stability: Ensure that the EGFR-TKI resistant cell line has a stable phenotype. Resistance can sometimes wane with continuous passaging without the selective pressure of the TKI. It is good practice to periodically re-verify the resistance profile. Drug Solubility and Stability: DS-1205, like many small molecule inhibitors, may have limited aqueous solubility. Ensure that the compound is fully dissolved in a suitable solvent (e.g., DMSO) and that the final solvent concentration is consistent across all wells and does not exceed a cytotoxic level (typically <0.5%). Prepare fresh drug dilutions for each experiment to avoid degradation. Assay Interference: Some phenol red-containing media can interfere with colorimetric or fluorometric assays. Consider using phenol red-free media. Additionally, some compounds can directly interfere with assay reagents (e.g., MTT, AlamarBlue). Run a cell-free control to test for any direct interaction between DS-1205 and your viability reagent.
My Western blot results for phosphorylated AXL (p-AXL) are weak or absent after stimulating with its ligand, GAS6.	Several factors can lead to weak or absent p-AXL signals. Low Endogenous AXL Expression: The cell line you are using may not express sufficient levels of AXL. Confirm AXL expression levels by running a positive control (e.g., a cell line known to overexpress AXL, such as one derived from a patient with known AXL-driven resistance). Ligand Activity: Ensure that the recombinant GAS6 used for stimulation is active. It is advisable to test a new batch of GAS6 on a positive control cell line. Timing of Stimulation: The kinetics of AXL phosphorylation

© 2026 BenchChem. All rights reserved.

	can be rapid and transient. Perform a time-course experiment (e.g., 5, 15, 30, 60 minutes) to determine the optimal time point for maximal phosphorylation after GAS6 stimulation. Antibody Quality: The anti-p-AXL antibody may not be specific or sensitive enough. Validate your antibody using a positive control and consider testing different antibodies if the issue persists.
I am not observing a synergistic effect when combining DS-1205 with an EGFR-TKI in my resistant cell line.	The absence of synergy could be due to several reasons. Mechanism of Resistance: The EGFR-TKI resistance in your cell line may not be driven by AXL activation. It is crucial to confirm the mechanism of resistance (e.g., T790M mutation, MET amplification) before initiating combination studies. AXL-independent resistance mechanisms will not be overcome by DS-1205. Drug Concentrations: The concentrations of DS-1205 and the EGFR-TKI may not be optimal. A checkerboard titration of both drugs is recommended to identify the concentration range where synergy is most likely to be observed. Endpoint Measurement: The endpoint used to measure synergy (e.g., cell viability at 72 hours) may not be appropriate. Consider using other assays that measure more immediate effects on signaling pathways (e.g., Western blot for downstream effectors like p-AKT and p-ERK) or long-term effects on colony formation.

In Vivo Xenograft Models

© 2026 BenchChem. All rights reserved.

Question	Answer
The tumors in my NSCLC xenograft model are growing slowly or not at all.	Poor tumor take-rate or slow growth can be a significant challenge. Cell Viability and Number: Ensure that the cells used for injection are highly viable (>95%) and that a sufficient number of cells are injected. The optimal cell number can vary between cell lines and should be determined empirically. Injection Technique: Subcutaneous injection technique is critical. Ensure that the cells are injected into the correct subcutaneous space and not intradermally, which can lead to poor tumor formation. Mouse Strain: The choice of immunocompromised mouse strain can impact tumor engraftment and growth. While nude mice are often used, more severely immunocompromised strains like NOD-scid IL2Rgammanull (NSG) mice may be necessary for some cell lines. Matrigel: Co-injection with Matrigel can improve tumor take-rate and growth for some cell lines.
I am observing high variability in tumor growth within the same treatment group.	High variability can make it difficult to interpret the results of your efficacy study. Tumor Size at Randomization: Ensure that all mice are randomized to treatment groups when their tumors reach a specific, uniform size. Starting treatment with a wide range of tumor volumes will lead to high variability in the final tumor measurements. Drug Administration: Inconsistent drug administration can lead to variable drug exposure and tumor response. Ensure that the dosing formulation is homogenous and that the administration (e.g., oral gavage, intraperitoneal injection) is performed consistently for all animals. Animal Health: Monitor the overall health of the animals

© 2026 BenchChem. All rights reserved.

	closely. Any underlying health issues can affect tumor growth and response to treatment.
How do I assess the efficacy of DS-1205 in combination with an EGFR-TKI in a xenograft model of acquired resistance?	To assess the combination effect in an acquired resistance model, you can use a few different experimental designs. Concurrent Treatment Model: Start treating established tumors concurrently with the EGFR-TKI and DS-1205. This design assesses the ability of the combination to overcome pre-existing resistance. Delayed DS-1205 Treatment Model: Treat established tumors with the EGFR-TKI alone until resistance develops (i.e., tumors start to regrow). Then, add DS-1205 to the treatment regimen. This design mimics the clinical scenario of treating patients who have relapsed on an EGFR-TKI. Prophylactic Model: Start treating with the combination of the EGFR-TKI and DS-1205 from the beginning. This design assesses whether DS-1205 can prevent or delay the emergence of resistance.[1]

Frequently Asked Questions (FAQs)

© 2026 BenchChem. All rights reserved.

Question	Answer
What is the mechanism of action of DS-1205?	DS-1205 is a selective small molecule inhibitor of the AXL receptor tyrosine kinase.[1][2] Upregulation and activation of AXL is a known mechanism of acquired resistance to EGFR-TKIs in NSCLC.[1] By inhibiting AXL, DS-1205 can block this bypass signaling pathway, thereby restoring sensitivity to EGFR-TKIs.[1][2]
What are the different forms of DS-1205 mentioned in the literature (DS-1205b vs. DS-1205c)?	DS-1205b is the active molecule that has been characterized in preclinical in vitro and in vivo studies.[1] DS-1205c is an orally bioavailable formulation of DS-1205 that has been used in clinical trials.[2] For preclinical research, DS-1205b is typically used.
Which cell lines are appropriate for studying the effects of DS-1205?	For studying the ability of DS-1205 to overcome EGFR-TKI resistance, it is essential to use an NSCLC cell line with an activating EGFR mutation that has acquired resistance to an EGFR-TKI through AXL upregulation. An example is the HCC827 cell line, which can be made resistant to erlotinib or osimertinib through long-term exposure.[1] To study the direct effects of DS-1205 on AXL signaling, a cell line engineered to overexpress AXL, such as NIH3T3-AXL, can be used.[1]
What are the potential off-target effects of DS-1205?	While DS-1205 is a selective AXL inhibitor, like all kinase inhibitors, it may have some off-target activity. It is important to consult the manufacturer's data sheet for the kinase selectivity profile. In preclinical studies, potential toxicities to monitor include liver enzyme elevations and gastrointestinal side effects, as these have been observed in clinical trials with DS-1205c.[2]

© 2026 BenchChem. All rights reserved.

How should I design my experiments to demonstrate that the effects of DS-1205 are on-target?	To confirm that the observed effects of DS-1205 are due to AXL inhibition, you can perform several control experiments. Genetic knockdown of AXL: Use siRNA or shRNA to knock down AXL expression. The phenotypic effects of DS-1205 should be mimicked by AXL knockdown. Rescue experiment: In AXL knockdown cells, express a form of AXL that is resistant to DS-1205. If the resistant AXL can rescue the phenotype, it confirms the on-target effect. Western blot analysis: Treat cells with DS-1205 and confirm that it inhibits the phosphorylation of AXL and its downstream signaling proteins.

Quantitative Data Summary

The following tables summarize key quantitative data from preclinical and clinical studies of **DS-1205**.

Table 1: In Vitro Activity of **DS-1205**b

Cell Line	Assay	Endpoint	DS-1205b Concentration	Result	Reference
NIH3T3-AXL	Migration Assay	Inhibition of hGAS6-induced migration	Not specified	Potent inhibition	[1]
HCC827 (Osimertinib-resistant)	Western Blot	Inhibition of AKT phosphorylation	16 nM (in combination with osimertinib)	Complete inhibition	[1]

© 2026 BenchChem. All rights reserved.

Table 2: In Vivo Efficacy of **DS-1205**b in Combination with EGFR-TKIs in an HCC827 Xenograft Model

Treatment Group	Outcome	Result	Reference
Erlotinib + DS-1205b	Onset of tumor resistance	Significantly delayed compared to erlotinib alone	[1]
Osimertinib + DS-1205b	Onset of tumor resistance	Delayed compared to osimertinib alone	[1]

Table 3: Clinically Observed Treatment-Emergent Adverse Events (TEAEs) with **DS-1205**c in Combination with Gefitinib

Adverse Event	Frequency
Increased aspartate aminotransferase	35%
Increased alanine aminotransferase	30%
Maculo-papular rash	30%
Diarrhea	25%

Experimental Protocols

Protocol 1: In Vitro Cell Viability Assay to Assess Synergy

- Cell Seeding: Seed EGFR-TKI resistant NSCLC cells (e.g., HCC827-erlotinib resistant) in 96-well plates at a density of 3,000-5,000 cells per well in complete growth medium. Allow cells to attach overnight.
- Drug Preparation: Prepare a stock solution of **DS-1205**b in DMSO. Prepare serial dilutions of **DS-1205**b and the EGFR-TKI (e.g., erlotinib or osimertinib) in culture medium.
- Drug Treatment: Treat the cells with a matrix of **DS-1205**b and EGFR-TKI concentrations. Include single-agent controls for each drug and a vehicle control (e.g., DMSO).

© 2026 BenchChem. All rights reserved.

- Incubation: Incubate the plates for 72 hours at 37°C in a humidified incubator with 5% CO2.
- Viability Assessment: Measure cell viability using a suitable assay, such as the CellTiter-Glo® Luminescent Cell Viability Assay or MTT assay, according to the manufacturer's instructions.
- Data Analysis: Calculate the percentage of cell viability relative to the vehicle control for each drug concentration and combination. Use a synergy analysis software (e.g., CompuSyn) to calculate the combination index (CI). A CI value less than 1 indicates synergy.

Protocol 2: Western Blot Analysis of AXL and EGFR Signaling Pathways

- Cell Treatment: Seed EGFR-TKI resistant NSCLC cells in 6-well plates. Once the cells reach 70-80% confluency, treat them with **DS-1205**b, the EGFR-TKI, or the combination for the desired time (e.g., 2, 6, or 24 hours). Include a vehicle control.
- Cell Lysis: Wash the cells with ice-cold PBS and lyse them in RIPA buffer containing protease and phosphatase inhibitors.
- Protein Quantification: Determine the protein concentration of each lysate using a BCA protein assay.
- SDS-PAGE and Western Blotting: Separate equal amounts of protein (e.g., 20-30 µg) on an SDS-PAGE gel and transfer the proteins to a PVDF membrane.
- Immunoblotting: Block the membrane with 5% non-fat dry milk or BSA in TBST for 1 hour at room temperature. Incubate the membrane with primary antibodies against p-AXL, total AXL, p-EGFR, total EGFR, p-AKT, total AKT, p-ERK, and total ERK overnight at 4°C. Use an antibody against a housekeeping protein (e.g., β-actin or GAPDH) as a loading control.
- Detection: Wash the membrane with TBST and incubate with the appropriate HRP-conjugated secondary antibody for 1 hour at room temperature. Detect the signal using an enhanced chemiluminescence (ECL) substrate and image the blot.

Protocol 3: In Vivo Xenograft Model of Acquired Resistance

© 2026 BenchChem. All rights reserved.

- Cell Implantation: Subcutaneously inject 5 x 10^6 EGFR-TKI resistant NSCLC cells (e.g., HCC827-erlotinib resistant) in a 1:1 mixture of PBS and Matrigel into the flank of immunocompromised mice (e.g., female athymic nude mice).
- Tumor Growth Monitoring: Monitor tumor growth by measuring the tumor volume with calipers twice a week. The tumor volume can be calculated using the formula: (Length x Width^2) / 2.
- Randomization and Treatment: When the tumors reach an average volume of 150-200 mm^3, randomize the mice into treatment groups (e.g., vehicle, EGFR-TKI alone, **DS-1205**b alone, and the combination of EGFR-TKI and **DS-1205**b).
- Drug Administration: Administer the drugs at the predetermined doses and schedule. For example, the EGFR-TKI might be given daily by oral gavage, and **DS-1205**b might be given twice daily by oral gavage.
- Efficacy Assessment: Continue to monitor tumor volume and body weight throughout the study. The primary efficacy endpoint is typically tumor growth inhibition or the time to tumor progression.
- Pharmacodynamic Analysis: At the end of the study, tumors can be harvested for pharmacodynamic analysis, such as Western blotting for target proteins or immunohistochemistry.

Visualizations

© 2026 BenchChem. All rights reserved.

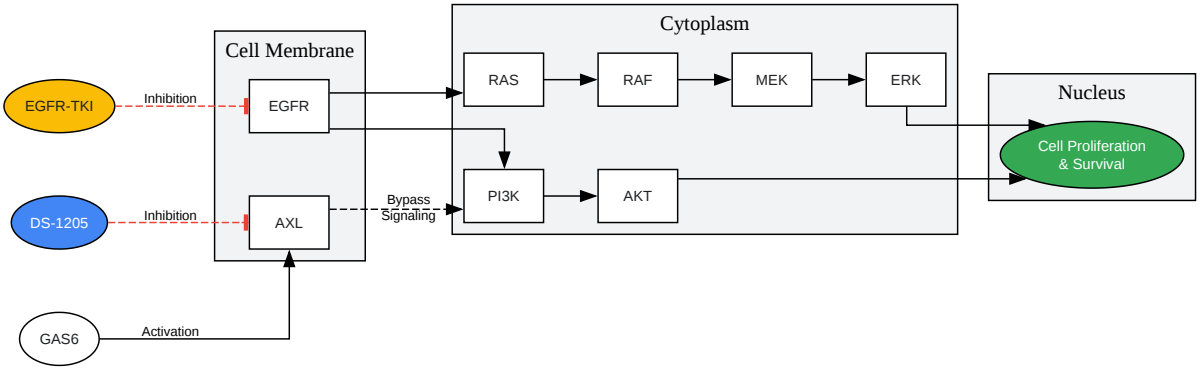

Click to download full resolution via product page

Caption: EGFR and AXL signaling pathways and points of inhibition.

© 2026 BenchChem. All rights reserved.

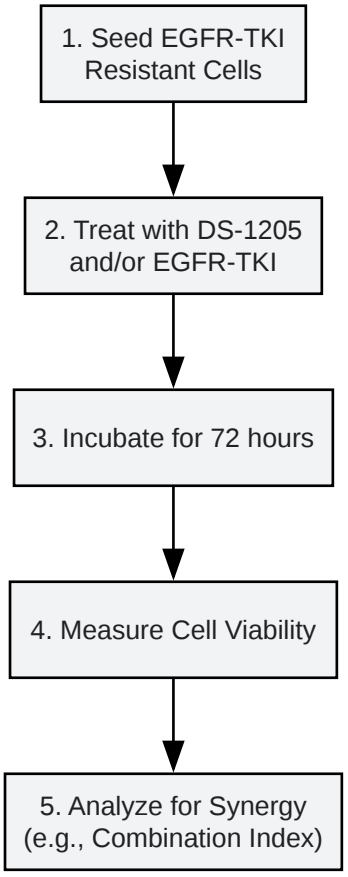

Click to download full resolution via product page

Caption: Workflow for in vitro synergy assessment.

© 2026 BenchChem. All rights reserved.

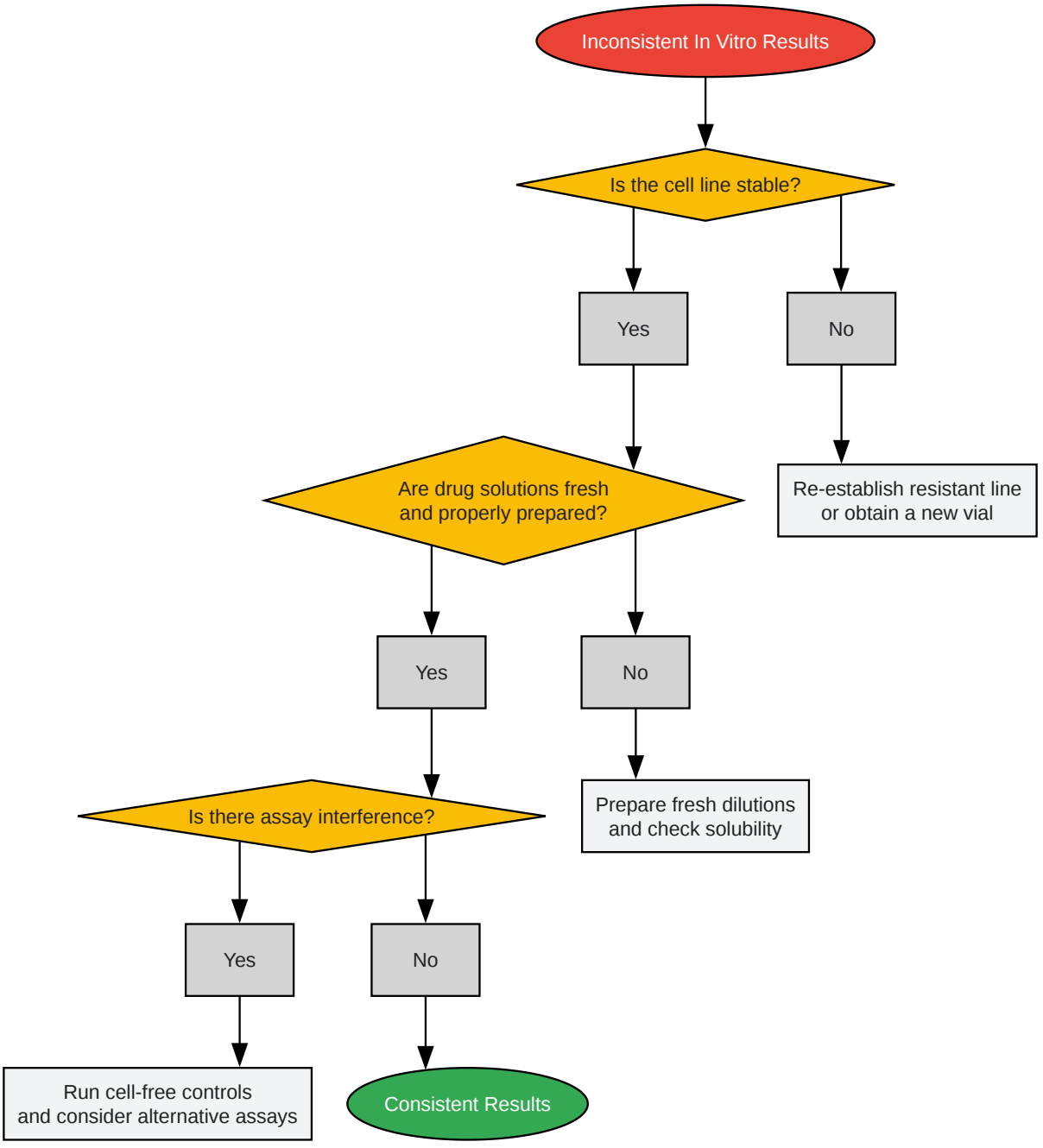

Click to download full resolution via product page

Caption: Troubleshooting logic for inconsistent in vitro results.

© 2026 BenchChem. All rights reserved.

Need Custom Synthesis?

BenchChem offers custom synthesis for rare earth carbides and specific isotopiclabeling.

Email: info@benchchem.com or Request Quote Online.

References

- 1. DS-1205b, a novel selective inhibitor of AXL kinase, blocks resistance to EGFR-tyrosine kinase inhibitors in a non-small cell lung cancer xenograft model - PubMed [pubmed.ncbi.nlm.nih.gov]
- 2. Phase 1 study of DS-1205c combined with gefitinib for EGFR mutation-positive non-small cell lung cancer - PubMed [pubmed.ncbi.nlm.nih.gov]
- To cite this document: BenchChem. [Common pitfalls in DS-1205 related experiments and how to avoid them]. BenchChem, [2026]. [Online PDF]. Available at: [https://www.benchchem.com/product/b1192654/docs#common-pitfalls-in-ds-1205-related-experiments-and-how-to-avoid-them]

Disclaimer & Data Validity:

The information provided in this document is for Research Use Only (RUO) and is strictly not intended for diagnostic or therapeutic procedures. While BenchChem strives to provide accurate protocols, we make no warranties, express or implied, regarding the fitness of this product for every specific experimental setup.

Technical Support: The protocols provided are for reference purposes. Unsure if this reagent suits your experiment?

Need Industrial/Bulk Grade? Request Custom Synthesis Quote

© 2026 BenchChem. All rights reserved.

BenchChem

Our mission is to be the trusted global source of essential and advanced chemicals, empowering scientists and researchers to drive progress in science and industry.

Contact

Address: 3281 E Guasti Rd

Ontario, CA 91761, United States

Phone: (601) 213-4426

Email: info@benchchem.com

Contact our Ph.D. Support Team for a compatibility check

© 2026 BenchChem. All rights reserved.