Application Notes & Protocols: Utilizing NU6300 for Immunoprecipitation Experiments

Author: BenchChem Technical Support Team. **Date**: April 2026

Compound of Interest

Compound Name: *NU6300*

Cat. No.: *B1191624*

Get Quote

Audience: Researchers, scientists, and drug development professionals.

Abstract: This document provides a detailed guide for the application of **NU6300** in immunoprecipitation (IP) and co-immunoprecipitation (Co-IP) experiments. **NU6300** is a versatile small molecule inhibitor with well-characterized covalent interactions with at least two key cellular proteins: Cyclin-Dependent Kinase 2 (CDK2) and Gasdermin D (GSDMD). By irreversibly binding to its targets, **NU6300** can be used to stabilize or disrupt protein-protein interactions, making it a valuable tool for elucidating cellular signaling pathways. These application notes describe **NU6300**'s mechanism of action and provide comprehensive protocols for its use in IP-based studies to investigate its effects on target protein complexes.

Mechanism of Action of NU6300

NU6300 was first identified as a covalent, irreversible, and ATP-competitive inhibitor of CDK2.[1][2][3] It was the first reported covalent inhibitor for CDK2, illustrating the potential of vinyl sulfones in designing potent and selective kinase inhibitors.[2][4] The covalent bond formation allows for durable inhibition of CDK2 activity, which can be observed through a sustained reduction in the phosphorylation of its downstream targets, such as the retinoblastoma tumor suppressor protein (Rb).[1][2]

© 2026 BenchChem. All rights reserved.

More recently, **NU6300** has been identified as a specific inhibitor of Gasdermin D (GSDMD), a key protein involved in pyroptosis, a form of inflammatory cell death.[5][6] **NU6300** covalently binds to cysteine-191 on GSDMD, which blocks its cleavage by inflammatory caspases.[5][6] This inhibition prevents the formation of GSDMD pores in the plasma membrane. Additionally, **NU6300** has been shown to impair the palmitoylation of GSDMD, a crucial step for its membrane localization and oligomerization.[5][6]

Quantitative Data for **NU6300** Interactions

The following tables summarize the key quantitative parameters of **NU6300**'s interaction with its primary targets.

Table 1: Kinase Inhibition Profile of **NU6300**

Target	Inhibition Type	IC50	Ki
CDK2	Covalent, Irreversible, ATP-Competitive	0.16 µM	6 nM

Data sourced from MedchemExpress, AbMole BioScience, and MedKoo Biosciences.[1][3][7]

Table 2: GSDMD Interaction Profile of **NU6300**

Target	Binding Site	Interaction Type	Binding Dissociation Constant (KD)
Gasdermin D (GSDMD)	Cysteine-191	Covalent	29.1 µM

Data sourced from a study published in Science Advances.[5]

Signaling Pathways Modulated by **NU6300**

NU6300's dual inhibitory action makes it a tool for studying two distinct and critical cellular pathways: cell cycle progression and inflammatory cell death.

© 2026 BenchChem. All rights reserved.

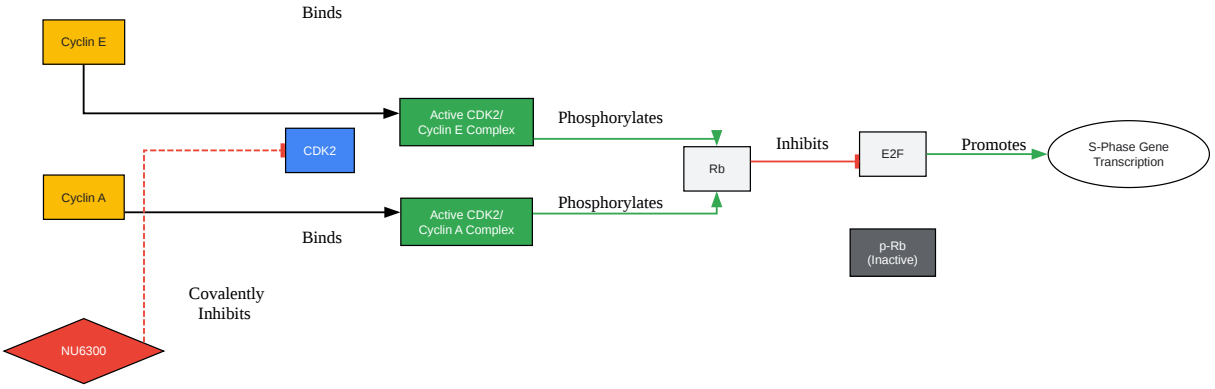

© 2026 BenchChem. All rights reserved.

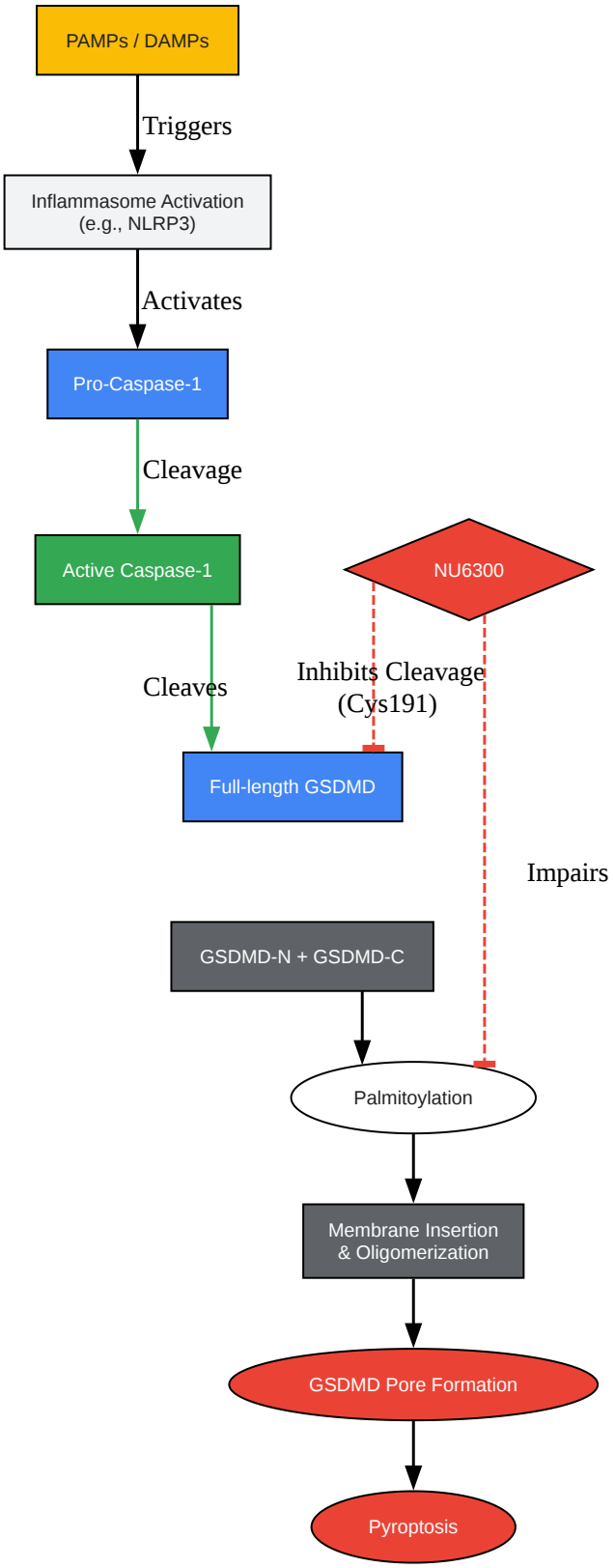

© 2026 BenchChem. All rights reserved.

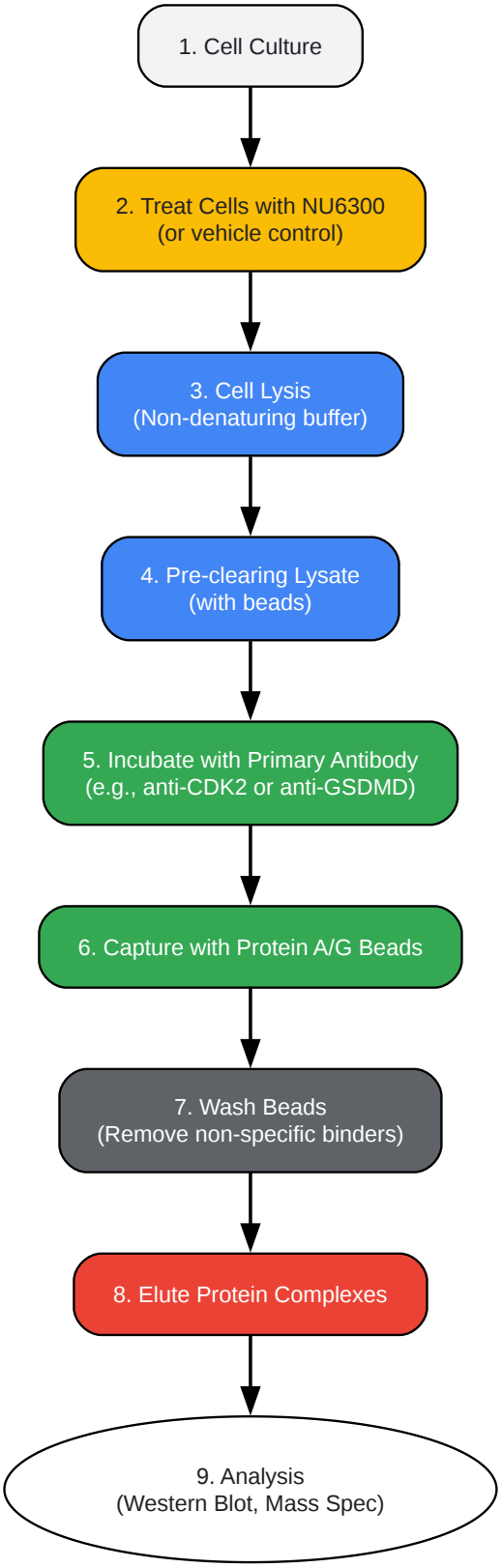

Click to download full resolution via product page

© 2026 BenchChem. All rights reserved.

Need Custom Synthesis?

BenchChem offers custom synthesis for rare earth carbides and specific isotopiclabeling.

Email: info@benchchem.com or Request Quote Online.

References

- 1. medchemexpress.com [medchemexpress.com]
- 2. Identification and Characterization of an Irreversible Inhibitor of CDK2 - PubMed [pubmed.ncbi.nlm.nih.gov]
- 3. abmole.com [abmole.com]
- 4. researchgate.net [researchgate.net]
- 5. NU6300 covalently reacts with cysteine-191 of gasdermin D to block its cleavage and palmitoylation - PMC [pmc.ncbi.nlm.nih.gov]
- 6. NU6300 covalently reacts with cysteine-191 of gasdermin D to block its cleavage and palmitoylation - PubMed [pubmed.ncbi.nlm.nih.gov]
- 7. medkoo.com [medkoo.com]
- To cite this document: BenchChem. [Application Notes & Protocols: Utilizing NU6300 for Immunoprecipitation Experiments]. BenchChem, [2026]. [Online PDF]. Available at: [https://www.benchchem.com/product/b1191624/docs#application-notes-protocols-utilizing-nu6300-for-immunoprecipitation-experiments]

Disclaimer & Data Validity:

The information provided in this document is for Research Use Only (RUO) and is strictly not intended for diagnostic or therapeutic procedures. While BenchChem strives to provide accurate protocols, we make no warranties, express or implied, regarding the fitness of this product for every specific experimental setup.

Technical Support: The protocols provided are for reference purposes. Unsure if this reagent suits your experiment?

Need Industrial/Bulk Grade? Request Custom Synthesis Quote

BenchChem

Our mission is to be the trusted global source of essential and advanced chemicals, empowering scientists and researchers to drive progress in science and industry.

Contact

Address: 3281 E Guasti Rd

Ontario, CA 91761, United States

Phone: (601) 213-4426

Email: info@benchchem.com

Contact our Ph.D. Support Team for a compatibility check

© 2026 BenchChem. All rights reserved.