Advanced Troubleshooting Center: Regioselective Indole Fluorination

Author: BenchChem Technical Support Team. **Date**: May 2026

Compound of Interest

Compound Name:	*Methyl 6-fluoro-1H-indole-5-carboxylate*
Cat. No.:	*B11906786*

Get Quote

Status: Online Operator: Senior Application Scientist (Ph.D., Organic Chemistry) Topic: Overcoming Regioselectivity Bias in Indole C-H Fluorination

Executive Summary: The Regioselectivity Paradox

As researchers, we know the indole core is electronically biased. The pyrrole ring is electron-rich, with the C3 position being the inherent nucleophilic "hotspot" (approximately

times more reactive than benzene).

- The Default Path: Electrophilic fluorinating reagents (Selectfluor, NFSI) will almost exclusively attack C3.
- The Challenge: Forcing fluorination to C2 (without blocking C3) or the benzenoid ring (C4–C7) requires suppressing this natural bias using transition metal catalysis, directing groups (DGs), or radical mechanisms.

This guide provides diagnostic workflows to troubleshoot these specific regioselectivity failures.

© 2026 BenchChem. All rights reserved.

Decision Matrix: Selecting the Right Methodology

Before troubleshooting a failed reaction, verify you are using the correct mechanistic manifold for your target position.

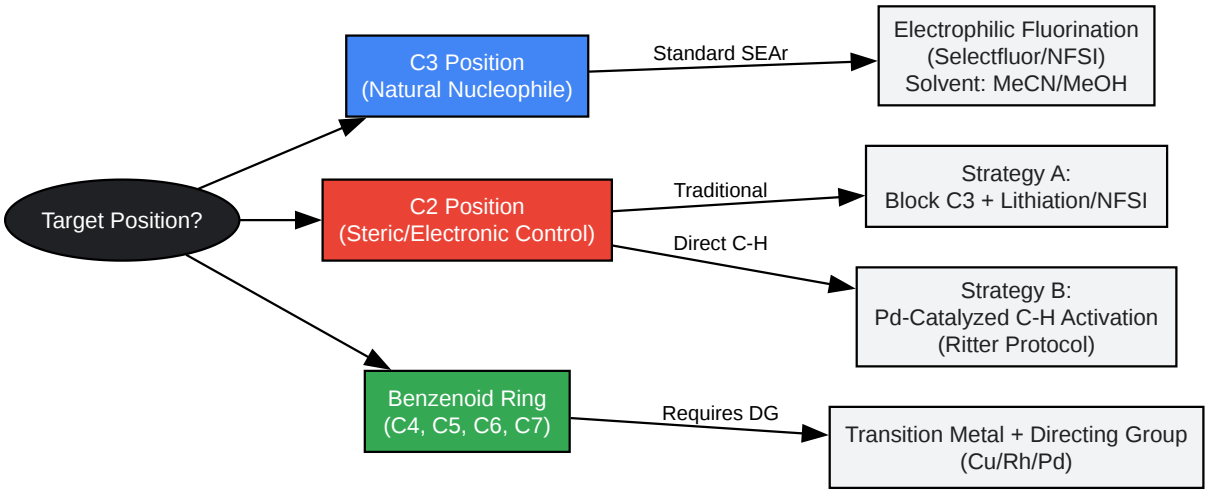

Click to download full resolution via product page

Figure 1: Strategic decision tree for indole fluorination based on target regioselectivity.

Module A: Troubleshooting C3-Fluorination (Electrophilic)

Primary Reagents: Selectfluor (F-TEDA-BF4), NFSI. Mechanism:

via a Wheland intermediate (iminium ion).

Common Failure Modes

© 2026 BenchChem. All rights reserved.

Symptom	Probable Cause	Diagnostic Step	Corrective Action
Product is 3,3-difluoroindolin-2-one (Over-oxidation)	Presence of water or nucleophilic solvents. The mono-fluoro iminium intermediate is trapped by .	Check LCMS for M+34 peak (oxidation) or M+38 (difluoro).	Strictly anhydrous conditions. Use molecular sieves (3Å). Switch solvent to pure MeCN or Nitromethane.
Polymerization / Black Tar	Acid-catalyzed polymerization. Indoles are acid-sensitive; HF is generated as a byproduct.	TLC shows streak from baseline.	Add a non-nucleophilic base scavenger (e.g., 2,6-di-tert-butylpyridine) to neutralize HF in situ.
Low Conversion	Poor solubility of Selectfluor or electron-deficient indole.	Visual check: Is Selectfluor undissolved?	Switch to Selectfluor II (more soluble) or increase temperature to 40-60°C. Use ionic liquids.
C2-Fluorination observed instead	Usually only happens if C3 is substituted.	NMR confirms C2-F doublet.	If C3 is open, this is rare. Verify starting material structure.

Technical Insight: The "Iminium Trap"

When Selectfluor attacks C3, it forms a cationic intermediate. If the reaction does not re-aromatize quickly (by losing the C3-proton), a second equivalent of fluorine or a nucleophile (water) will attack.

- Tip: Using a polar, non-nucleophilic solvent like Sulfolane or Nitromethane can stabilize the intermediate and favor re-aromatization over decomposition.

Module B: Troubleshooting C2 & Benzenoid Fluorination (Metal-Catalyzed)

© 2026 BenchChem. All rights reserved.

Primary Reagents: Pd(OAc)2, AgF, Electrophilic F+ sources (NFSI). Mechanism: High-valent Pd(IV)-F species or Directing Group assisted cyclometallation.

The Ritter Pathway (Pd-Catalyzed)

Professor Tobias Ritter's group established a paradigm for Pd-catalyzed fluorination that avoids traditional reductive elimination issues.

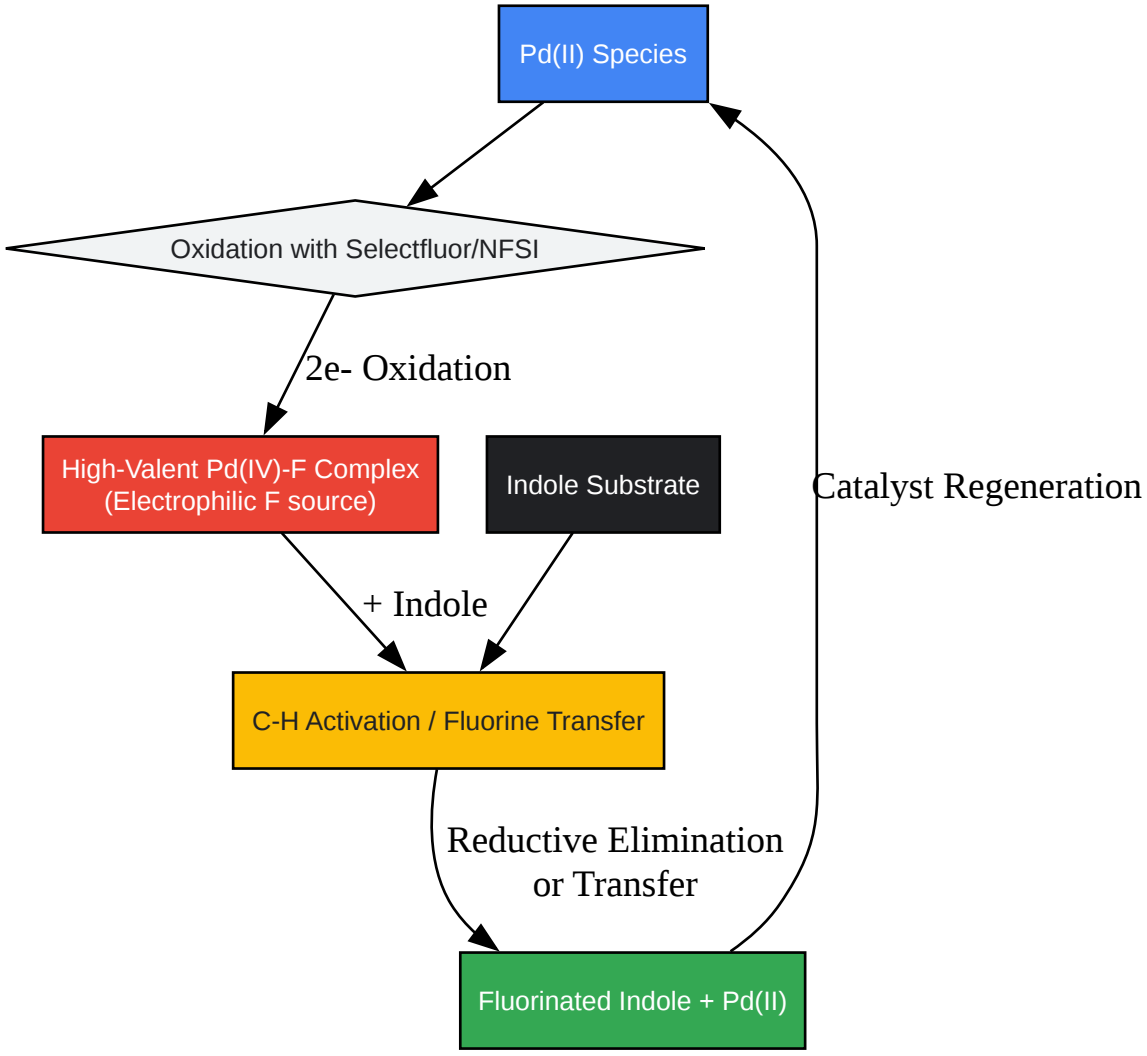

Click to download full resolution via product page

Figure 2: Simplified catalytic cycle for Pd-mediated electrophilic fluorination (High-valent pathway).

Troubleshooting Matrix: Metal-Catalyzed Reactions

© 2026 BenchChem. All rights reserved.

Symptom	Probable Cause	Corrective Action
No Reaction (Starting Material Recovered)	Catalyst poisoning or failure to oxidize Pd(II) to Pd(IV).	Oxidant Check: Ensure Selectfluor/NFSI is fresh (not hydrolyzed). Additives: Add crude AgF or KF to facilitate the fluoride transfer.
Regioselectivity Drift (Mixture of C2/C3)	Lack of steric control or directing group failure.	Ligand Switch: Use bulky ligands (e.g., substituted pyridines or bipyridines) to enforce steric selectivity at C2.
Protodefluorination (Product unstable)	The C-F bond on the electron-rich indole is labile, especially during acidic workup.	Workup: Avoid acidic washes. Quench with saturated .[1] Perform column chromatography on neutral alumina or basified silica (1%).
C4/C5 Selectivity Failure	Directing group (DG) is too weak or geometry is incorrect.	DG Optimization: For C4, use a bulky DG at C3 (e.g., pivaloyl) to push the metal to C4. For C5, this is extremely difficult; consider transient directing groups (TDGs) or radical fluoroalkylation instead.

Validated Protocols

Protocol A: Standard C3-Fluorination (Selectfluor)

Best for: Unsubstituted indoles seeking C3-F.

- Setup: Flame-dry a round-bottom flask under Argon.
- Dissolution: Dissolve Indole (1.0 equiv) in anhydrous Acetonitrile (0.1 M).

© 2026 BenchChem. All rights reserved.

- Addition: Add Selectfluor (1.1 equiv) in one portion at 0°C.
  - Critical Step: If the substrate is acid-sensitive, add 1.1 equiv of 2,6-lutidine or 2,6-di-tert-butylpyridine prior to Selectfluor.
- Reaction: Stir at 0°C for 1 hour, then warm to RT. Monitor by TLC.[1]
- Quench: Pour into dilute

  . Extract with EtOAc.
- Purification: Flash chromatography. Warning: C3-fluoroindoles can be unstable. Store at -20°C.

Protocol B: Pd-Catalyzed C2-Fluorination (Ritter-Type Conditions)

Best for: C3-substituted indoles requiring C2-F.

- Catalyst: Pd(OAc)2 (10 mol%).
- Ligand: 3-nitro-pyridine or specific bipyridine ligands (20 mol%).
- F-Source: NFSI (2.0 equiv).
- Additives: PivOH (30 mol%) can assist C-H activation.
- Solvent: Toluene or Dioxane/Toluene mix.
- Conditions: Heat to 80-100°C in a sealed tube for 12-24h.
- Note: This reaction often proceeds via a Pd(II)/Pd(IV) manifold. The high temperature is necessary to overcome the activation energy of the C-H bond cleavage at the sterically hindered C2 position.

FAQ: Senior Scientist's Notes

© 2026 BenchChem. All rights reserved.

Q: Why does my C3-fluoroindole turn red/brown on the bench? A: C3-fluoroindoles are essentially "hidden" imines. They are prone to hydrolysis or oligomerization upon exposure to moisture and light. Store them under inert gas in the freezer.

Q: Can I get C5-fluorination directly without pre-functionalization? A: Direct electrophilic fluorination of C5 is chemically unlikely due to the overwhelming nucleophilicity of C3. You must use a Directing Group (DG) strategy (e.g., a directing group on the Nitrogen or C3) combined with Copper or Palladium catalysis to direct the metal to the benzenoid ring. Alternatively, consider constructing the indole ring from a 4-fluoroaniline precursor (Fischer Indole Synthesis) rather than fluorinating the indole post-synthesis.

Q: I'm seeing "3,3-difluoroindoline" instead of 3-fluoroindole. Why? A: You have "Over-fluorination." This happens when the product (3-fluoroindole) is more nucleophilic than the starting material, or you have excess reagent.

- Fix: Use a slight deficit of Selectfluor (0.95 equiv) and stop the reaction at 90% conversion.

References

- Ritter, T., et al. (2018).[2][3] "Palladium-catalysed electrophilic aromatic C–H fluorination." Nature.[4]
  - Context: Establishes the Pd(IV)
- Jiao, N., et al. (2011).[5] "An efficient difluorohydroxylation of indoles using Selectfluor as a fluorinating reagent." Organic Letters.
  - Context: Explains the mechanism of Selectfluor attacking C3 and the risks of over-oxidation/hydroxyl
- Shi, Z., et al. (2025/Recent). "Copper-Mediated C4–H Selective Fluoroalkoxylation of Indoles via a Transient Directing Group Strategy." ResearchGate/Journal.
  - Context: Advanced strategies for benzenoid ring functionaliz
- BenchChem Support. (2025). "A Comparative Guide to Electrophilic N-F Fluorinating Reagents: Selectfluor® and NFSI."

© 2026 BenchChem. All rights reserved.

- Context: Practical data on reagent solubility and reactivity profiles.

Need Custom Synthesis?

BenchChem offers custom synthesis for rare earth carbides and specific isotopiclabeling.

Email: info@benchchem.com or Request Quote Online.

Sources

- 1. pdf.benchchem.com [pdf.benchchem.com]
- 2. researchgate.net [researchgate.net]
- 3. Palladium-catalysed electrophilic aromatic C-H fluorination - PubMed [pubmed.ncbi.nlm.nih.gov]
- 4. New access to direct aromatic CH-fluorination with tailor-made palladium catalyst discovered: Professor Tobias Ritter publishes interesting research results for medicinal chemistry in "nature". [kofo.mpg.de]
- 5. An efficient difluorohydroxylation of indoles using selectfluor as a fluorinating reagent - PubMed [pubmed.ncbi.nlm.nih.gov]
- To cite this document: BenchChem. [Advanced Troubleshooting Center: Regioselective Indole Fluorination]. BenchChem, [2026]. [Online PDF]. Available at: [https://www.benchchem.com/product/b11906786/docs#advanced-troubleshooting-center-regioselective-indole-fluorination]

Disclaimer & Data Validity:

The information provided in this document is for Research Use Only (RUO) and is strictly not intended for diagnostic or therapeutic procedures. While BenchChem strives to provide accurate protocols, we make no warranties, express or implied, regarding the fitness of this product for every specific experimental setup.

Technical Support: The protocols provided are for reference purposes. Unsure if this reagent suits your experiment?

Need Industrial/Bulk Grade? Request Custom Synthesis Quote

© 2026 BenchChem. All rights reserved.

BenchChem

Our mission is to be the trusted global source of essential and advanced chemicals, empowering scientists and researchers to drive progress in science and industry.

Contact

Address: 3281 E Guasti Rd

Ontario, CA 91761, United States

Phone: (601) 213-4426

Email: info@benchchem.com

Contact our Ph.D. Support Team for a compatibility check

© 2026 BenchChem. All rights reserved.