Spectroscopic Data Guide: 7-(1,1-Dimethylethyl)-1,4-dioxaspiro[4.5]decane

Author: BenchChem Technical Support Team. **Date**: May 2026

Compound of Interest

Compound Name:	*7-(1,1-Dimethylethyl)-1,4-dioxaspiro(4.5)decane*
CAS No.:	*49673-70-3*
Cat. No.:	*B11902780*

Get Quote

Executive Summary & Structural Logic

Compound Identity: 7-(1,1-Dimethylethyl)-1,4-dioxaspiro[4.5]decane CAS Registry Number: 49673-70-3 Common Name: 3-tert-Butylcyclohexanone ethylene ketal Molecular Formula: $C_{12}H_{22}O_2$ Molecular Weight: 198.30 g/mol

Structural Distinction (Critical)

It is imperative to distinguish this compound (the 7-isomer) from its more common regioisomer, the 8-(1,1-dimethylethyl) derivative (4-tert-butylcyclohexanone ethylene ketal).

- 8-Isomer (Para): Possesses a plane of symmetry (

  ), rendering the ketal protons equivalent (singlet) and simplifying the NMR spectra.

- 7-Isomer (Meta - This Topic): The tert-butyl group at position 7 (relative to the spiro center at 5) breaks the molecular symmetry. The molecule is chiral (though often used as a racemate).

© 2026 BenchChem. All rights reserved.

This lack of symmetry renders the ethylene ketal protons diastereotopic, resulting in complex multiplets rather than a clean singlet.

Synthesis & Sample Preparation

To ensure spectroscopic fidelity, the sample is typically prepared via acid-catalyzed ketalization. Impurities from incomplete conversion (residual ketone) will appear at

210+ ppm in

C NMR.

Protocol: Acid-Catalyzed Ketalization

- Reagents: 3-tert-Butylcyclohexanone (1.0 eq), Ethylene Glycol (5.0 eq), p-Toluenesulfonic acid (pTsOH, 0.05 eq).
- Solvent: Benzene or Toluene (anhydrous).
- Apparatus: Dean-Stark trap for azeotropic water removal.
- Procedure: Reflux until water evolution ceases (approx. 4-6 hours).
- Workup: Wash with sat. $NaHCO_3$, brine, dry over $MgSO_4$, and concentrate.
- Purification: Vacuum distillation or flash chromatography (Hexanes/EtOAc 9:1).

Visualization: Synthesis Workflow

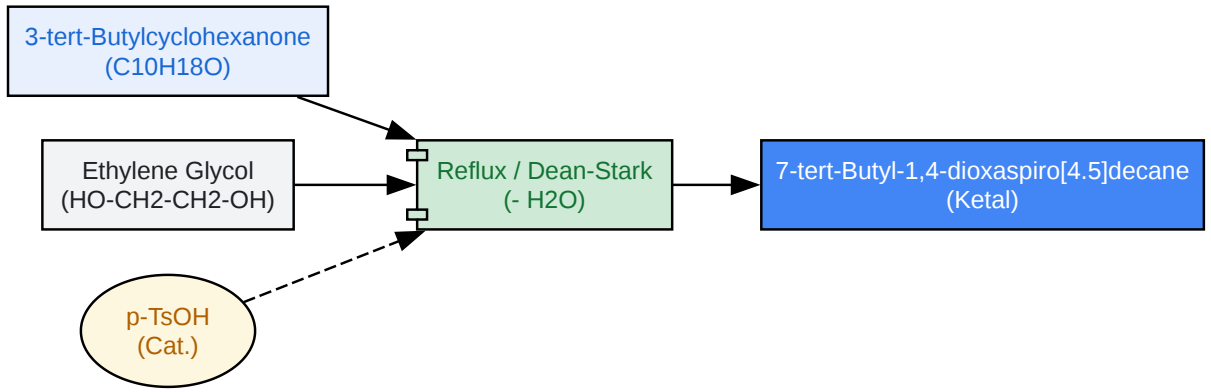

© 2026 BenchChem. All rights reserved.

Click to download full resolution via product page

Caption: Acid-catalyzed condensation of 3-tert-butylcyclohexanone with ethylene glycol.

Spectroscopic Profile

A. Infrared Spectroscopy (FT-IR)

The conversion from ketone to ketal is most easily monitored by the disappearance of the carbonyl stretch.

Functional Group	Wavenumber (cm^{-1})	Assignment
C-H Stretch	2960 - 2850	Alkyl C-H (Strong, characteristic of t-butyl & cyclohexane)
C=O Stretch	Absent	Absence confirms complete ketalization (Ketone appears ~1715 cm^{-1})
C-O-C Stretch	1080 - 1150	Cyclic Ketal (Strong, broad bands)
Fingerprint	1365, 1390	gem-Dimethyl doublet (t-butyl group)

B. Mass Spectrometry (EI-MS)

Under Electron Ionization (70 eV), the molecule exhibits a characteristic fragmentation pattern driven by the stability of the ketal functionality.

- Molecular Ion (M^+):m/z 198 (Weak, often <5%)
- Base Peak:m/z 99 or 86 (Ring cleavage)
- Key Fragments:
  - m/z 183 $[M - CH_3]^+$: Loss of a methyl group from the tert-butyl moiety.

© 2026 BenchChem. All rights reserved.

- m/z 141 [M - tBu]$^+$: Loss of the entire tert-butyl group.
- m/z 99: Characteristic dioxolane cation (alpha-cleavage).

C. Nuclear Magnetic Resonance (NMR)

The NMR data reflects the rigid chair conformation locked by the bulky tert-butyl group (equatorial preference > 5 kcal/mol).

^{1}H NMR (400 MHz, $CDCl_3$)

Unlike the 8-isomer, the 7-isomer's ketal protons are diastereotopic.

Shift (δ ppm)	Multiplicity	Integration	Assignment	Structural Insight
0.86 - 0.90	Singlet	9H	-C(CH_3)$_3$	tert-Butyl group (Equatorial)
1.20 - 1.85	Multiplet	9H	Cyclohexane Ring	Complex envelope; axial/equatorial protons
3.90 - 4.00	Multiplet	4H	-O-CH_2-CH_2-O-	Diagnostic: Appears as an AA'BB' or ABCD multiplet due to chirality at C7.

Mechanistic Note: In the 8-isomer (4-t-butyl), the ketal protons often appear as a singlet at δ 3.94 due to the plane of symmetry. In the 7-isomer (3-t-butyl), the lack of symmetry makes the "top" and "bottom" faces of the ketal distinct, splitting this signal.

^{13}C NMR (100 MHz, $CDCl_3$)

The spectrum displays 10 distinct carbon environments (plus the t-butyl methyls).

© 2026 BenchChem. All rights reserved.

Shift (δ ppm)	Type	Assignment
109.5	Quaternary (C)	C5 (Spiro): Ketal carbon (shifted from ~211 ppm in ketone)
64.1, 64.3	Secondary (CH_2)	C2, C3: Ethylene glycol carbons (May appear as two peaks due to asymmetry)
42 - 45	Secondary (CH_2)	C6, C10: Ring carbons α to the spiro center
32.4	Quaternary (C)	tert-Butyl quaternary carbon
27.6	Primary (CH_3)	tert-Butyl methyls (3x)
20 - 35	Secondary/Tertiary	Remaining ring carbons (C7, C8, C9)

Visualization: NMR Logic & Conformation

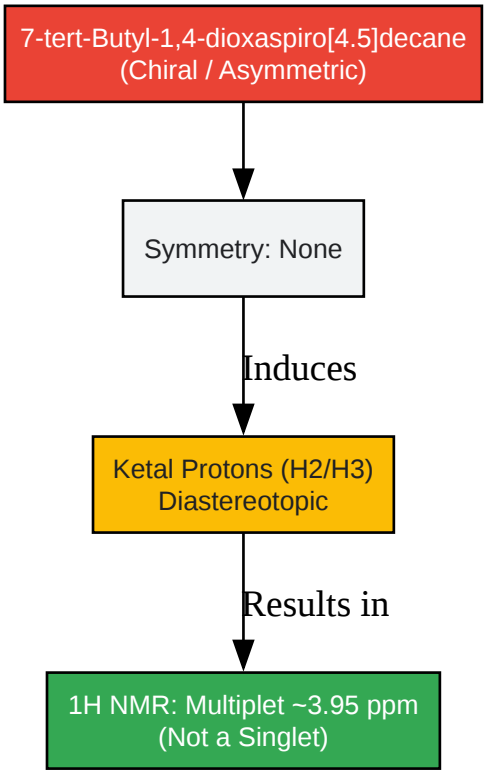

© 2026 BenchChem. All rights reserved.

Click to download full resolution via product page

Caption: Impact of asymmetry (C7 substitution) on the splitting pattern of ketal protons.

Experimental Validation Protocol

To validate the identity of the synthesized 7-isomer against the common 8-isomer:

- Run ^{1}H NMR in $CDCl_3$: Focus on the region 3.9–4.0 ppm.
  - Singlet

    Likely 8-isomer (4-t-butyl).
  - Multiplet

    Likely 7-isomer (3-t-butyl).
- Run ^{13}C NMR (DEPT-135):
  - Verify the number of CH_2 signals. The 7-isomer will show distinct shifts for C6 and C10 (alpha to spiro), whereas the 8-isomer may show equivalence or simpler patterns depending on resolution.
- Melting Point (Derivative): If the ketal is liquid, hydrolyze a small aliquot back to the ketone and measure the MP of the 2,4-DNP derivative.
  - 3-tert-butylcyclohexanone 2,4-DNP MP: ~140°C.
  - 4-tert-butylcyclohexanone 2,4-DNP MP: ~213°C.

References

- National Center for Biotechnology Information (2025).PubChem Compound Summary for CID 12300053, 7-(1,1-Dimethylethyl)-1,4-dioxaspiro[4.5]decane. Retrieved from [Link]
- Eliel, E. L., & Wilen, S. H. (1994).Stereochemistry of Organic Compounds. Wiley-Interscience.

© 2026 BenchChem. All rights reserved.

- NIST Mass Spectrometry Data Center.1,4-Dioxaspiro[4.5]decane Derivatives. NIST Chemistry WebBook, SRD 69. Retrieved from [Link]

- To cite this document: BenchChem. [Spectroscopic Data Guide: 7-(1,1-Dimethylethyl)-1,4-dioxaspiro[4.5]decane]. BenchChem, [2026]. [Online PDF]. Available at: [https://www.benchchem.com/product/b11902780/docs#spectroscopic-data-guide-7-1-1-dimethylethyl-1-4-dioxaspiro-4-5-decane]

Disclaimer & Data Validity:

The information provided in this document is for Research Use Only (RUO) and is strictly not intended for diagnostic or therapeutic procedures. While BenchChem strives to provide accurate protocols, we make no warranties, express or implied, regarding the fitness of this product for every specific experimental setup.

Technical Support: The protocols provided are for reference purposes. Unsure if this reagent suits your experiment?

Need Industrial/Bulk Grade? Request Custom Synthesis Quote

BenchChem

Our mission is to be the trusted global source of essential and advanced chemicals, empowering scientists and researchers to drive progress in science and industry.

Contact

Address: 3281 E Guasti Rd

Ontario, CA 91761, United States

Phone: (601) 213-4426

Email: info@benchchem.com

Contact our Ph.D. Support Team for a compatibility check

© 2026 BenchChem. All rights reserved.