Application Note: High-Fidelity Scale-Up of 4-Chloro-2-(cyclopentyloxy)pyridine

Author: BenchChem Technical Support Team. **Date**: February 2026

Compound of Interest		
Compound Name:	*4-Chloro-2-(cyclopentyloxy)pyridine*	
CAS No.:	*1346707-00-3*	
Cat. No.:	*B11900087*	*Get Quote*

Executive Summary

The synthesis of **4-chloro-2-(cyclopentyloxy)pyridine** presents a classic regioselectivity challenge in heterocyclic chemistry. While the 2,4-dichloropyridine precursor is inexpensive, direct nucleophilic aromatic substitution (

) typically favors the 4-position, yielding the undesired 2-chloro-4-alkoxy isomer.

This guide details a high-fidelity scale-up protocol prioritizing regiochemical integrity. We recommend the O-alkylation of 4-chloro-2-hydroxypyridine as the primary route for pharmaceutical-grade production, offering superior impurity profiles compared to direct displacement methods. A secondary "Commodity Route" via direct

is discussed for scenarios where downstream isomer separation (distillation) is viable.

Process Chemistry & Route Selection

The Regioselectivity Problem

The core challenge lies in the electronic difference between the C2 and C4 positions of the pyridine ring.

- Electronic Bias: In 2,4-dichloropyridine, the C4 position is generally more electrophilic and less sterically hindered, making it the preferred site for nucleophilic attack by alkoxides

© 2026 BenchChem. All rights reserved.

(kinetic control).

- The Consequence: Direct reaction with cyclopentoxide often yields a ~60:40 to 80:20 mixture favoring the undesired 4-substituted product.

Strategic Pathways

We evaluate two distinct synthetic strategies:

Feature	Route A: Pyridone O-Alkylation (Recommended)	Route B: Direct Displacement
Precursor	4-Chloro-2-hydroxypyridine (4-Chloro-2-pyridone)	2,4-Dichloropyridine
Reagent	Cyclopentyl Bromide (or Mesylate)	Cyclopentanol + NaH/KOH
Selectivity	High (O- vs N-alkylation tunable)	Low (C4 vs C2 competition)
Purification	Crystallization or Filtration	Difficult Distillation (Isomer separation)
Scalability	Excellent (Batch/Flow compatible)	Good, but yield loss to wrong isomer is high

Mechanistic Pathway Diagram

The following diagram illustrates the competing pathways and the rationale for selecting the O-alkylation route.

© 2026 BenchChem. All rights reserved.

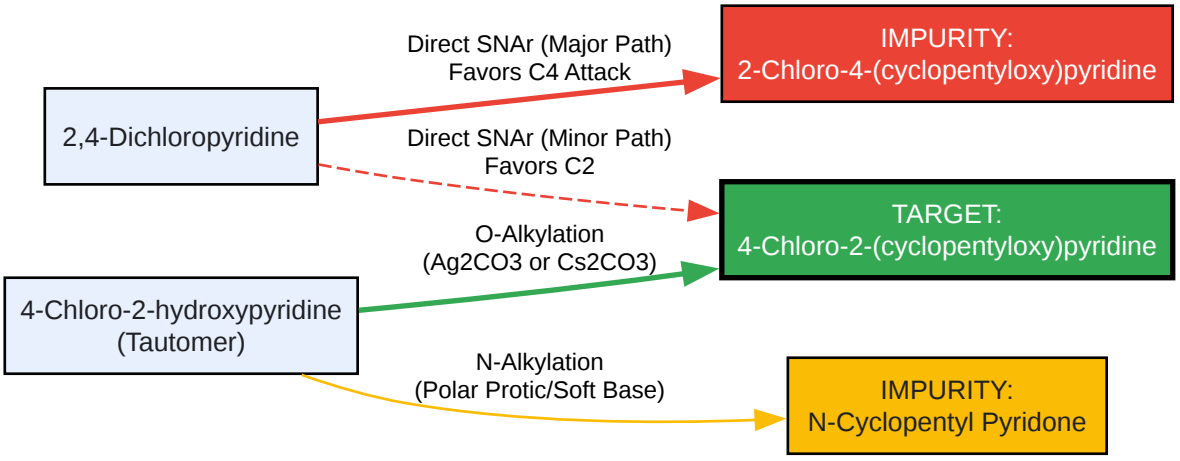

Click to download full resolution via product page

Figure 1: Mechanistic divergence showing why direct

on 2,4-dichloropyridine is unfavorable for the C2-alkoxy target.[1]

Detailed Protocol: O-Alkylation Route (Recommended)

This protocol utilizes Cesium Carbonate (

) to promote O-alkylation over N-alkylation due to the "Cesium Effect" (coordination to the hard oxygen nucleophile). For cost-sensitive scales, Potassium Carbonate (

) with a phase transfer catalyst (18-crown-6) is a viable alternative.

Reagents & Materials

© 2026 BenchChem. All rights reserved.

Reagent	Equiv.[2][3][4]	Role	Critical Attribute
4-Chloro-2-hydroxypyridine	1.0	Substrate	Purity >98%; Dry
Cyclopentyl Bromide	1.2 - 1.5	Electrophile	Freshly distilled if yellow
Cesium Carbonate ( )	1.5 - 2.0	Base	Finely ground; Anhydrous
DMF (N,N-Dimethylformamide)	5-10 Vol	Solvent	Anhydrous (<0.05% water)
Ethyl Acetate / Hexanes	-	Workup	HPLC Grade

Step-by-Step Methodology

Step 1: Reactor Charging

- Purge a glass-lined reactor (or RBF for lab scale) with Nitrogen ( ).[5]
- Charge 4-Chloro-2-hydroxypyridine (1.0 equiv) and Cesium Carbonate (1.5 equiv).
- Add DMF (5 volumes) under agitation. Note: The reaction is heterogeneous.

Step 2: Alkylation Reaction

- Heat the slurry to 60°C.
- Add Cyclopentyl Bromide (1.2 equiv) dropwise over 30-60 minutes. Control: Exotherm is usually mild, but rate-limit addition to maintain T < 65°C.
- Stir at 60-70°C for 4-8 hours.
- IPC (In-Process Control): Monitor by HPLC.

© 2026 BenchChem. All rights reserved.

- Target: < 2% Starting Material.
- Check Ratio: O-alkyl (Target) vs N-alkyl (Impurity). Expect >90:10 ratio with

  .

Step 3: Quench & Workup

- Cool reactor to 20°C.
- Dilute with Water (10 volumes) and Ethyl Acetate (10 volumes).
- Agitate for 15 minutes and settle. Separate phases.
- Wash the organic phase with Brine (2 x 5 vol) to remove residual DMF.
- Dry organic phase over

  and filter.

Step 4: Purification (Isomer Removal)

- The N-alkyl impurity (N-cyclopentyl-4-chloro-2-pyridone) is typically more polar.
- Method: Silica Gel Plug Filtration (eluting with 10% EtOAc/Hexanes) or Vacuum Distillation.
- Distillation: The O-ether typically boils lower than the N-alkyl amide.
- Yield Target: 75-85% isolated yield.

Alternative "Commodity" Route (Direct)

Use this route ONLY if you have efficient distillation capabilities to separate the C2/C4 isomers.

Protocol:

- Reagents: 2,4-Dichloropyridine (1.0 eq), Cyclopentanol (1.5 eq), KOH (2.0 eq), 18-Crown-6 (0.05 eq), Toluene (Solvent).

© 2026 BenchChem. All rights reserved.

- Reaction: Reflux with water removal (Dean-Stark) or use Anhydrous conditions (NaH in THF).
- Outcome: Mixture of 2-chloro-4-(cyclopentyloxy)pyridine (Major, ~70%) and **4-chloro-2-(cyclopentyloxy)pyridine** (Minor, ~30%).
- Purification: Fractional distillation is required to isolate the minor C2-isomer.
  - Warning: This route has poor atom economy for the target isomer but uses cheaper starting materials.

Safety & Hazard Assessment

Hazard	Mitigation
Alkyl Halides (Cyclopentyl Bromide)	Lachrymator and skin irritant. Handle in closed systems.
DMF (Solvent)	Hepatotoxin. Use proper PPE. Wash skin immediately upon contact.
Thermal Runaway	O-alkylation is mildly exothermic. Direct with NaH is highly exothermic with evolution.
Waste Disposal	Cesium salts are expensive; consider recovery or disposal as heavy metal waste depending on local regulations.

Process Flow Diagram (PFD)

© 2026 BenchChem. All rights reserved.

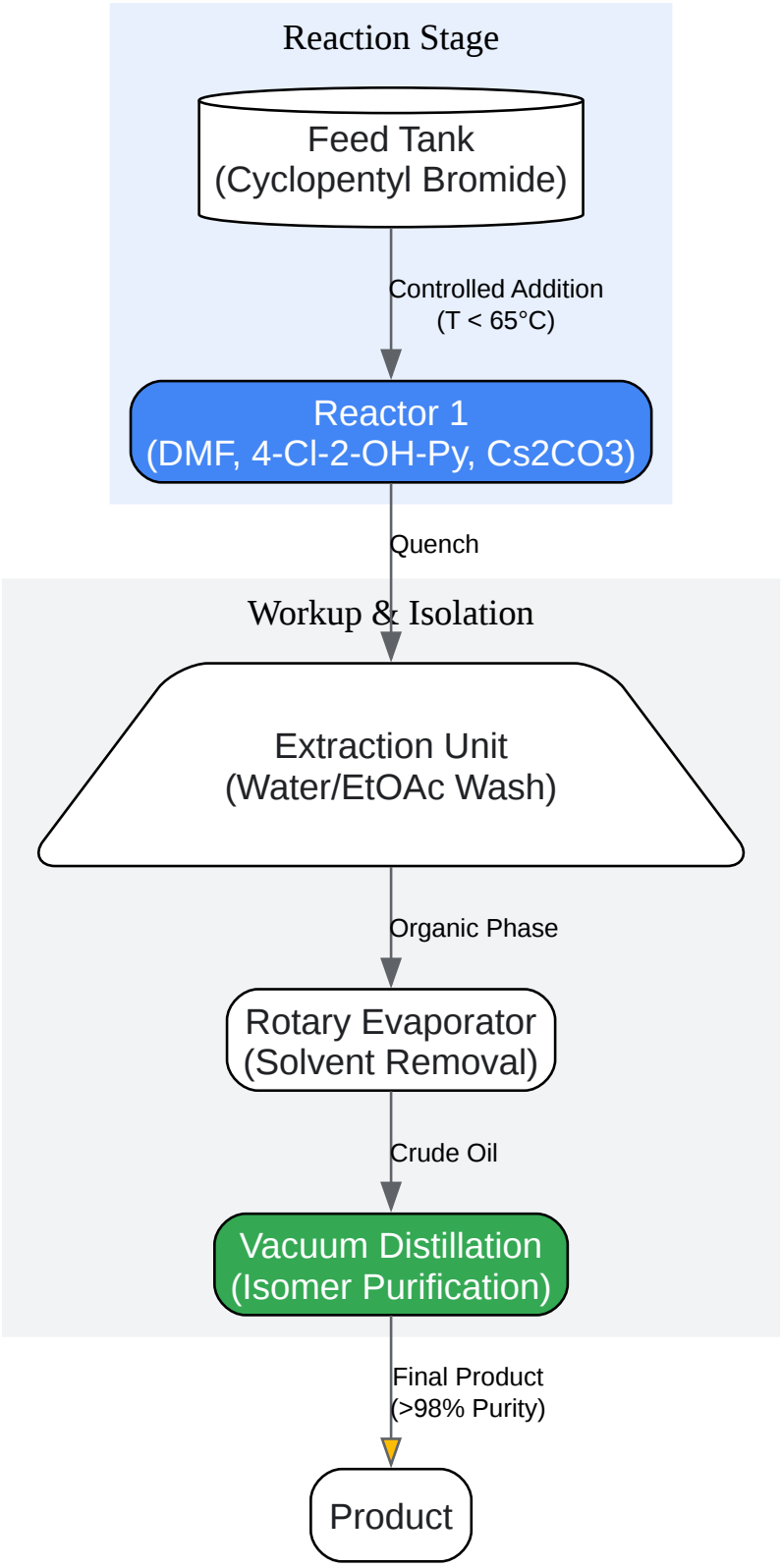

Click to download full resolution via product page

Figure 2: Unit operation sequence for the O-alkylation process.

© 2026 BenchChem. All rights reserved.

References

- Regioselectivity of

  in Dichloropyridines:

  - BenchChem Technical Report: "Controlling Regioselectivity in Dichloropyridine Reactions." (Confirming C4 preference in direct displacement).

- C2-Selective Coupling Strategies

  - Digitell Inc / ACS: "C2-selective Pd-catalyzed cross-coupling of 2,4-Dihalopyrimidines." (Discusses overcoming innate C4 selectivity).

- Synthesis of 4-Alkoxypyridines

  - Semantic Scholar: "Synthesis of 4-alkoxypyridines as intermediates." (General protocols for alkoxypyridine synthesis).

- Hydrolysis of Dichloropyridines

  - BenchChem:[6] "2-Chloro-4(1H)-pyridinone | 17368-12-6."[7] (Data on hydrolysis products and tautomers).

- General Pyridine Chemistry

  - WuXi AppTec: "Understanding the highly variable Regioselectivity in SNAr reaction."

Need Custom Synthesis?

BenchChem offers custom synthesis for rare earth carbides and specific isotopiclabeling.

Email: info@benchchem.com or Request Quote Online.

Sources

- 1. Dichotomy in Regioselectivity of SNAr Reactions with 2-MeSO2-4-Chloropyrimidine - RCS Research Chemistry Services [rcs.wuxiapptec.com]

© 2026 BenchChem. All rights reserved.

- 2. pdf.benchchem.com [pdf.benchchem.com]
- 3. 4-Amino-2,6-dichloropyrimidine | 10132-07-7 | Benchchem [benchchem.com]
- 4. scribd.com [scribd.com]
- 5. N-Heterocyclic Carbene Ligand-Controlled Chemodivergent Suzuki-Miyaura Cross Coupling - PMC [pmc.ncbi.nlm.nih.gov]
- 6. 2-Chloro-4(1H)-pyridinone | 17368-12-6 | Benchchem [benchchem.com]
- 7. guidechem.com [guidechem.com]

- To cite this document: BenchChem. [Application Note: High-Fidelity Scale-Up of 4-Chloro-2-(cyclopentyloxy)pyridine]. BenchChem, [2026]. [Online PDF]. Available at: [https://www.benchchem.com/product/b11900087#scaling-up-synthesis-of-4-chloro-2-cyclopentyloxy-pyridine]

Disclaimer & Data Validity:

The information provided in this document is for Research Use Only (RUO) and is strictly not intended for diagnostic or therapeutic procedures. While BenchChem strives to provide accurate protocols, we make no warranties, express or implied, regarding the fitness of this product for every specific experimental setup.

Technical Support: The protocols provided are for reference purposes. Unsure if this reagent suits your experiment? [Contact our Ph.D. Support Team for a compatibility check]

Need Industrial/Bulk Grade? Request Custom Synthesis Quote

BenchChem

Our mission is to be the trusted global source of essential and advanced chemicals, empowering scientists and researchers to drive progress in science and industry.

Contact

Address: 3281 E Guasti Rd

Ontario, CA 91761, United States

Phone: (601) 213-4426

Email: info@benchchem.com

© 2026 BenchChem. All rights reserved.