# Technical Support Center: Optimizing Suzuki-Miyaura Cross-Coupling of Pyridines

**Author**: BenchChem Technical Support Team. **Date**: April 2026

***Compound of Interest***

| | |
|---|---|
| *Compound Name:* | *4-Chloro-5-hydroxy-2-methylpyridine* |
| *CAS No.:* | *1261811-68-0* |
| *Cat. No.:* | *B11811294* |

*Get Quote*

This technical support center provides troubleshooting guidance and frequently asked questions (FAQs) to help researchers, scientists, and drug development professionals optimize Suzuki-Miyaura cross-coupling reactions involving pyridine substrates.

## Troubleshooting Guide & FAQs

This section addresses common issues encountered during the Suzuki-Miyaura cross-coupling of pyridines.

Issue 1: Low or No Yield

Q1: My Suzuki-Miyaura reaction with a pyridine substrate is giving low to no yield. What are the most common causes?

A1: Low or no yield in Suzuki-Miyaura couplings of pyridines is a frequent issue, often stemming from several factors:

© 2026 BenchChem. All rights reserved.

- Instability of the Boron Reagent: 2-Pyridyl boronic acids are notoriously unstable and prone to protodeboronation, where the boronic acid group is cleaved and replaced by a hydrogen atom.[1][2] This decomposition is a primary reason for low yields.
- Catalyst Inhibition: The nitrogen atom in the pyridine ring can coordinate to the palladium catalyst, leading to catalyst inhibition or deactivation.[3] This is particularly problematic with highly basic aminopyridines.[3]
- Slow Transmetalation: Electron-deficient heteroaryl boron derivatives, like those of pyridine, can exhibit slow rates of transmetalation in the catalytic cycle.[4]
- Suboptimal Reaction Conditions: The choice of catalyst, ligand, base, and solvent is critical and highly substrate-dependent. An inappropriate combination can lead to failed reactions.

Q2: How can I address the instability of 2-pyridyl boronic acids?

A2: To overcome the instability of 2-pyridyl boronic acids, consider the following strategies:

- Use of Stabilized Boron Reagents: Instead of boronic acids, employ more stable derivatives such as:
  - Pinacol esters (RB(pin)): These are generally more stable than the corresponding boronic acids.
  - N-methyliminodiacetic acid (MIDA) boronates: These are highly stable, crystalline solids that slowly release the boronic acid under reaction conditions, which can be advantageous.[5]
  - Trifluoroborate salts (RBF3K): These salts are often more robust and less susceptible to protodeboronation compared to boronic acids.[4][5]
  - N-phenyldiethanolamine boronates: These have been shown to be stable and effective in Suzuki-Miyaura couplings.[6]
- In Situ Generation: Prepare the pyridyl boronic acid derivative and use it immediately in the coupling reaction to minimize decomposition.

© 2026 BenchChem. All rights reserved.

Q3: What are the recommended catalyst and ligand combinations for pyridine couplings?

A3: The choice of catalyst and ligand is crucial for an efficient reaction. For challenging pyridine substrates, highly active catalyst systems are required.

- Palladium Precatalysts: $Pd(OAc)_2$, $Pd_2(dba)_3$, and $Pd(PPh_3)_4$ are common choices. $Pd_2(dba)_3$ is often favored for its ability to readily form the active Pd(0) species.[4][7]
- Phosphine Ligands: Electron-rich and sterically bulky phosphine ligands are generally preferred as they promote the oxidative addition and reductive elimination steps and can stabilize the palladium catalyst.[3] Effective ligands include:
  - Buchwald-type ligands: SPhos, XPhos, and RuPhos are highly effective for challenging couplings, including those involving heteroaryl substrates.[8]
  - Trialkylphosphines: $P(t\text{-}Bu)_3$ and $PCy_3$ have shown high efficacy, particularly for coupling with less reactive aryl chlorides.[9]
  - $FcPPh_2$ (1,1'-Bis(diphenylphosphino)ferrocene): This ligand has been used successfully in the coupling of alkyl pinacol boronic esters with 2,6-dichloropyridines.[7]

Issue 2: Side Reactions and Impurities

Q4: I am observing significant homocoupling of my boronic acid. How can I minimize this?

A4: Homocoupling, the reaction of two boronic acid molecules, is a common side reaction. It is often promoted by the presence of Pd(II) species and oxygen.[10]

- Ensure Proper Degassing: Thoroughly degas your reaction mixture and solvents to remove oxygen. This can be done by bubbling an inert gas (argon or nitrogen) through the solvent or by using freeze-pump-thaw cycles.[8]
- Use a Pd(0) Source: Starting with a Pd(0) precatalyst like $Pd_2(dba)_3$ can sometimes reduce homocoupling compared to Pd(II) sources like $Pd(OAc)_2$ or $PdCl_2(dppf)$.
- Control Reaction Temperature: Higher temperatures can sometimes lead to increased side reactions.

© 2026 BenchChem. All rights reserved.

Q5: Protodeboronation is a major issue in my reaction. What conditions can help suppress it?

A5: Protodeboronation is particularly problematic with electron-deficient heteroaryl boronic acids like 2-pyridyl boronic acid.[1][4]

- Choice of Base: The base plays a critical role. While a base is necessary to activate the boronic acid for transmetalation, strong bases can also promote protodeboronation.[11][12] Weaker bases like $K_2CO_3$, $NaHCO_3$, or phosphates ($K_3PO_4$) are often preferred over strong bases like NaOH or KOH.[8][9] The use of anhydrous bases can also be beneficial.
- Use of Stabilized Boron Reagents: As mentioned in A2, using more stable boronate esters or trifluoroborates can significantly reduce protodeboronation.[5]
- Reaction Temperature: Running the reaction at a lower temperature can sometimes minimize this side reaction, although it may also slow down the desired coupling.[8]

Issue 3: Optimizing Reaction Parameters

Q6: What is the role of the base, and how do I choose the right one?

A6: The base is essential for the Suzuki-Miyaura reaction. Its primary role is to facilitate the transmetalation step by forming a more nucleophilic "ate" complex with the boronic acid.[11][13] The choice of base can significantly impact the reaction outcome.

- Inorganic Bases:
  - Carbonates ($K_2CO_3$, $Na_2CO_3$, $Cs_2CO_3$): These are widely used and effective for many pyridine couplings.[14]
  - Phosphates ($K_3PO_4$): Often a good choice for challenging couplings and can be particularly effective with sterically hindered substrates.[9]
  - Fluorides (KF, CsF): Can be effective, especially when using boronate esters.[4]
- Organic Bases: In some cases, organic bases like triethylamine ($NEt_3$) or diisopropylethylamine (DIPEA) may be used, but inorganic bases are more common.

© 2026 BenchChem. All rights reserved.

The optimal base is substrate-dependent and often needs to be screened. Generally, starting with $K_2CO_3$ or $K_3PO_4$ is a good approach.

Q7: Which solvent system is best for Suzuki-Miyaura coupling of pyridines?

A7: The solvent's role is to solubilize the reactants and catalyst and can influence the reaction rate and selectivity.[15] Common solvents include:

- Aprotic Solvents:
  - Dioxane: A very common and often effective solvent.[4][14]
  - Toluene: Another widely used solvent, particularly in industrial applications.
  - Tetrahydrofuran (THF): Can be a good choice, especially for reactions at lower temperatures.[14]
  - Dimethylformamide (DMF): A polar aprotic solvent that can sometimes improve yields, but may also promote side reactions.[16]
- Protic Solvents/Co-solvents:
  - Water: Often used as a co-solvent with an organic solvent (e.g., dioxane/water, toluene/water). The presence of water can be beneficial for dissolving the inorganic base and can accelerate the reaction.[16][17][18]
  - Alcohols (e.g., Ethanol, Methanol): Can also be used as co-solvents and have been shown to have a positive effect in some cases.[16]

A mixture of an aprotic solvent with water is a common starting point for optimization.

## Data Presentation: Comparison of Reaction Conditions

The following tables summarize quantitative data from the literature to aid in the selection of reaction conditions.

© 2026 BenchChem. All rights reserved.

Table 1: Effect of Base on the Coupling of 4-bromoanisole with Lithium Triisopropyl 2-pyridylboronate

| Entry | Base | Yield (%) |
|---|---|---|
| 1 | KF | 74 |
| 2 | $K_3PO_4$ | 65 |
| 3 | $K_2CO_3$ | 45 |
| 4 | $Cs_2CO_3$ | 38 |

Reaction Conditions: 1 equiv of 4-bromoanisole, 1.5 equiv of 2-pyridylboronate, 3.0 equiv of base, Dioxane, $Pd_2(dba)_3$/ligand catalyst system. Data adapted from a study on a general method for the Suzuki-Miyaura coupling of 2-pyridyl nucleophiles.[4]

Table 2: Effect of Catalyst Loading on the Coupling of 2-methoxy-5-pyridylboronic acid with 3-amino-6-chloropyridazine

| Entry | Catalyst Loading (mol %) | Yield (%) |
|---|---|---|
| 1 | 1 | 37 |
| 2 | 5 | 69 |
| 3 | 10 | 67 |

Reaction Conditions: $Na_2CO_3$ (1 M aq.) as base, bis(triphenylphosphino)palladium dichloride as catalyst, in 1,4-dioxane at reflux.[14] Data adapted from a study on the synthesis of highly substituted bipyridines and pyrazinopyridines.[14]

# Experimental Protocols

Protocol 1: General Procedure for Suzuki-Miyaura Coupling of a Halopyridine with an Arylboronic Acid

- Reaction Setup: To an oven-dried Schlenk tube equipped with a magnetic stir bar, add the halopyridine (1.0 equiv), arylboronic acid (1.2-1.5 equiv), and base (e.g., $K_2CO_3$, 2.0-3.0

© 2026 BenchChem. All rights reserved.

equiv).

- Catalyst Addition: Add the palladium catalyst (e.g., $Pd(PPh_3)_4$, 1-5 mol %) and ligand (if required).
- Solvent Addition: Add the degassed solvent system (e.g., dioxane/water 4:1).
- Inert Atmosphere: Evacuate and backfill the Schlenk tube with an inert gas (argon or nitrogen) three times.
- Reaction: Heat the reaction mixture to the desired temperature (e.g., 80-100 °C) with stirring for the required time (typically 2-24 hours).
- Monitoring: Monitor the reaction progress by thin-layer chromatography (TLC) or liquid chromatography-mass spectrometry (LC-MS).
- Workup: Upon completion, cool the reaction to room temperature. Dilute with an organic solvent (e.g., ethyl acetate) and wash with water and brine.
- Purification: Dry the organic layer over anhydrous sodium sulfate, filter, and concentrate under reduced pressure. Purify the crude product by column chromatography on silica gel.

Protocol 2: Preparation and Use of a Lithium Triisopropyl 2-Pyridylboronate

- Boronate Preparation: In a flame-dried flask under an inert atmosphere, dissolve the 2-halopyridine (e.g., 2-bromopyridine) in anhydrous THF. Cool the solution to -78 °C.
- Add n-butyllithium (1.05 equiv) dropwise and stir for 30 minutes.
- Add triisopropyl borate (1.1 equiv) and allow the mixture to slowly warm to room temperature overnight.
- Quench the reaction with aqueous HCl. Extract with an organic solvent, dry, and concentrate to obtain the boronic acid, which can be converted to the lithium triisopropyl boronate by treatment with isopropanol and an appropriate lithium base.
- Coupling Reaction: An oven-dried resealable Schlenk tube is charged with the palladium precatalyst (e.g., $Pd_2(dba)_3$, 2-3 mol %), a suitable ligand (e.g., a phosphine oxide ligand, 6-9

© 2026 BenchChem. All rights reserved.

mol %), the lithium triisopropyl 2-pyridylboronate (1.5 equiv), the aryl halide (1.0 equiv), and an anhydrous base (e.g., KF, 3.0 equiv).[4]

- The tube is capped, evacuated, and backfilled with argon.
- Anhydrous dioxane is added, and the mixture is heated (e.g., 100 °C) until the starting material is consumed.
- Follow standard workup and purification procedures as described in Protocol 1.

# Visualizations

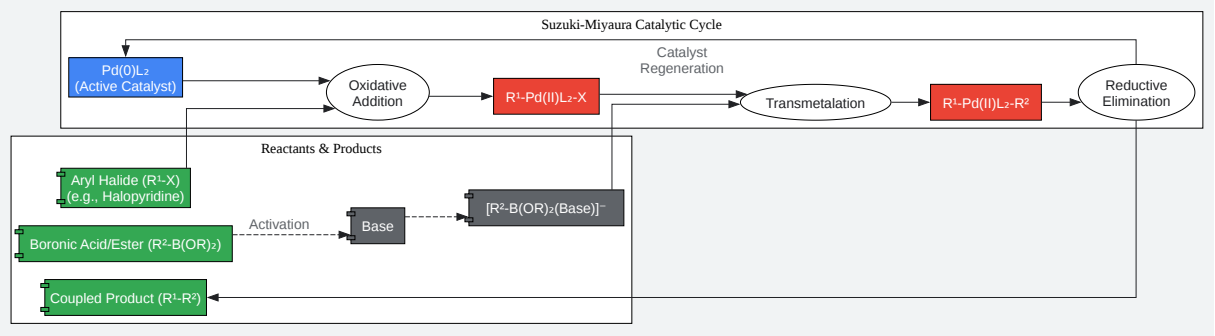


Click to download full resolution via product page

Caption: The catalytic cycle of the Suzuki-Miyaura cross-coupling reaction.

© 2026 BenchChem. All rights reserved.

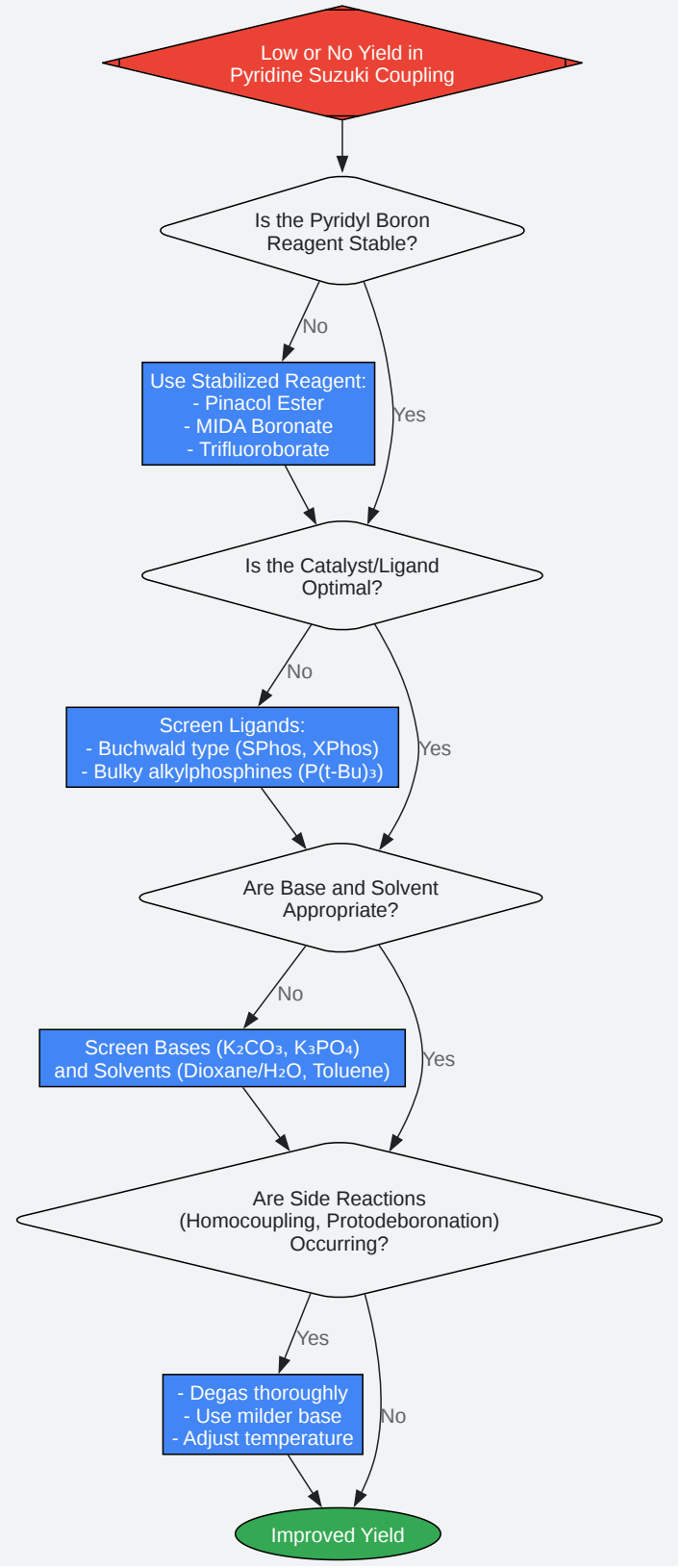


Click to download full resolution via product page

Caption: A decision tree for troubleshooting low-yield Suzuki-Miyaura couplings of pyridines.

© 2026 BenchChem. All rights reserved.

***Need Custom Synthesis?***

*BenchChem offers custom synthesis for rare earth carbides and specific isotopiclabeling.*

*Email: info@benchchem.com or Request Quote Online.*

# References

- 1. researchgate.net [researchgate.net]
- 2. ora.ox.ac.uk [ora.ox.ac.uk]
- 3. A Highly Active Catalyst for Suzuki-Miyaura Cross-Coupling Reactions of Heteroaryl Compounds [organic-chemistry.org]
- 4. A General and Efficient Method for the Suzuki-Miyaura Coupling of 2-Pyridyl Nucleophiles - PMC [pmc.ncbi.nlm.nih.gov]
- 5. myers.faculty.chemistry.harvard.edu [myers.faculty.chemistry.harvard.edu]
- 6. researchgate.net [researchgate.net]
- 7. pubs.acs.org [pubs.acs.org]
- 8. reddit.com [reddit.com]
- 9. books.rsc.org [books.rsc.org]
- 10. Yoneda Labs [yonedalabs.com]
- 11. researchgate.net [researchgate.net]
- 12. Role of the Base and Control of Selectivity in the Suzuki–Miyaura Cross-Coupling Reaction | Semantic Scholar [semanticscholar.org]
- 13. wwjmrd.com [wwjmrd.com]
- 14. pubs.acs.org [pubs.acs.org]
- 15. Solvent Effects on the Selectivity of Palladium-Catalyzed Suzuki-Miyaura Couplings - PMC [pmc.ncbi.nlm.nih.gov]
- 16. researchgate.net [researchgate.net]
- 17. Highly efficient Suzuki-Miyaura coupling of heterocyclic substrates through rational reaction design - PubMed [pubmed.ncbi.nlm.nih.gov]
- 18. cdnsciencepub.com [cdnsciencepub.com]

© 2026 BenchChem. All rights reserved.

- To cite this document: BenchChem. [Technical Support Center: Optimizing Suzuki-Miyaura Cross-Coupling of Pyridines]. BenchChem, [2026]. [Online PDF]. Available at: [https://www.benchchem.com/product/b11811294/docs#technical-support-center-optimizing-suzuki-miyaura-cross-coupling-of-pyridines]

---

**Disclaimer & Data Validity:**

The information provided in this document is for Research Use Only (RUO) and is strictly not intended for diagnostic or therapeutic procedures. While BenchChem strives to provide accurate protocols, we make no warranties, express or implied, regarding the fitness of this product for every specific experimental setup.

**Technical Support:**The protocols provided are for reference purposes. Unsure if this reagent suits your experiment?

**Need Industrial/Bulk Grade?** Request Custom Synthesis Quote

BenchChem

Our mission is to be the trusted global source of essential and advanced chemicals, empowering scientists and researchers to drive progress in science and industry.

Contact

Address: 3281 E Guasti Rd

Ontario, CA 91761, United States

Phone: (601) 213-4426

Email: info@benchchem.com

Contact our Ph.D. Support Team for a compatibility check

© 2026 BenchChem. All rights reserved. 