Analyzing the Cellular Impact of FOLFOX Chemotherapy using Flow Cytometry

Author: BenchChem Technical Support Team. **Date**: April 2026

Compound of Interest

Compound Name:	*FLOX4*
CAS No.:	*169211-43-2*
Cat. No.:	*B1180844*

Get Quote

Application Notes and Protocols for Researchers, Scientists, and Drug Development Professionals

Introduction

FOLFOX is a cornerstone chemotherapy regimen for colorectal cancer, combining fluorouracil (5-FU), leucovorin, and oxaliplatin. This powerful combination therapy exerts its cytotoxic effects through multiple mechanisms, primarily by inducing DNA damage, inhibiting DNA synthesis, and generating oxidative stress, ultimately leading to cancer cell death. Flow cytometry is an indispensable tool for dissecting the cellular responses to FOLFOX, providing rapid, quantitative, and multi-parametric analysis at the single-cell level. This document provides detailed application notes and experimental protocols for utilizing flow cytometry to analyze the effects of FOLFOX on key cellular processes: apoptosis, cell cycle progression, and the induction of reactive oxygen species (ROS).

Key Applications of Flow Cytometry in Evaluating FOLFOX Efficacy

© 2026 BenchChem. All rights reserved.

Flow cytometry allows for the precise measurement of several key indicators of cellular response to FOLFOX treatment:

- Apoptosis: Quantifying the percentage of cells undergoing programmed cell death is a direct measure of the cytotoxic efficacy of FOLFOX.
- Cell Cycle Arrest: Analyzing the distribution of cells in different phases of the cell cycle reveals how FOLFOX interferes with cancer cell proliferation.
- Oxidative Stress: Measuring the levels of intracellular ROS provides insight into one of the critical mechanisms of FOLFOX-induced cell damage.

Data Presentation

The following tables summarize quantitative data from studies investigating the effects of FOLFOX and its components on colorectal cancer cell lines.

Table 1: Induction of Apoptosis by FOLFOX in Colorectal Cancer Cell Lines

Cell Line	Treatment	Percentage of Apoptotic Cells (%)
HT29	Control	5.2 ± 1.1
	FOLFOX	25.7 ± 3.4
HCT116	Control	3.8 ± 0.9
	FOLFOX	31.4 ± 4.2
SW480	Control	4.1 ± 0.8
	FOLFOX	28.9 ± 3.7

Data is presented as mean ± standard deviation.

Table 2: Effect of 5-FU and Oxaliplatin on Cell Cycle Distribution in HCT116 Cells

© 2026 BenchChem. All rights reserved.

Treatment	G0/G1 Phase (%)	S Phase (%)	G2/M Phase (%)
Control	55.2 ± 2.5	30.1 ± 1.8	14.7 ± 1.2
Oxaliplatin + 5-FU	68.4 ± 3.1	15.3 ± 1.5	16.3 ± 1.9

Data is presented as mean ± standard deviation. This data represents the effects of the core components of FOLFOX.

Table 3: Induction of Reactive Oxygen Species (ROS) by Oxaliplatin in Colorectal Cancer Cells

Cell Line	Treatment	Mean Fluorescence Intensity (MFI) of DCFDA
SW480	Control	100 (Normalized)
Oxaliplatin (10 µM)	250 ± 25	
Oxaliplatin (50 µM)	480 ± 40	
DLD-1	Control	100 (Normalized)
Oxaliplatin (10 µM)	280 ± 30	
Oxaliplatin (50 µM)	550 ± 55	

Data is presented as mean ± standard deviation. This data highlights the ROS-inducing effect of a key component of FOLFOX.

Signaling Pathways and Experimental Workflow

To visually represent the mechanisms and procedures involved, the following diagrams have been generated using Graphviz.

© 2026 BenchChem. All rights reserved.

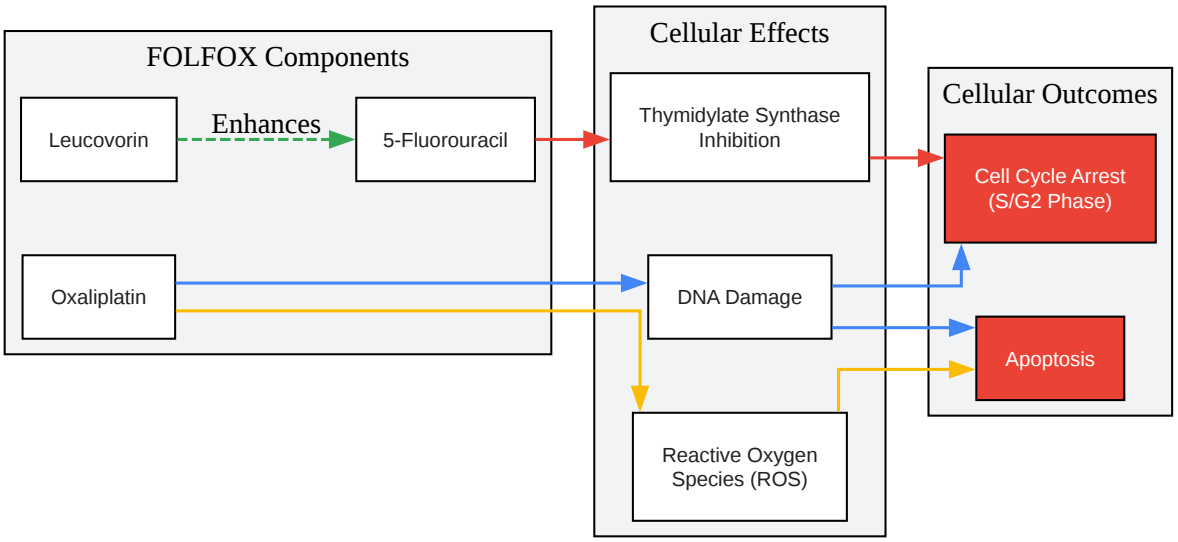

Click to download full resolution via product page

Mechanism of FOLFOX Action

© 2026 BenchChem. All rights reserved.

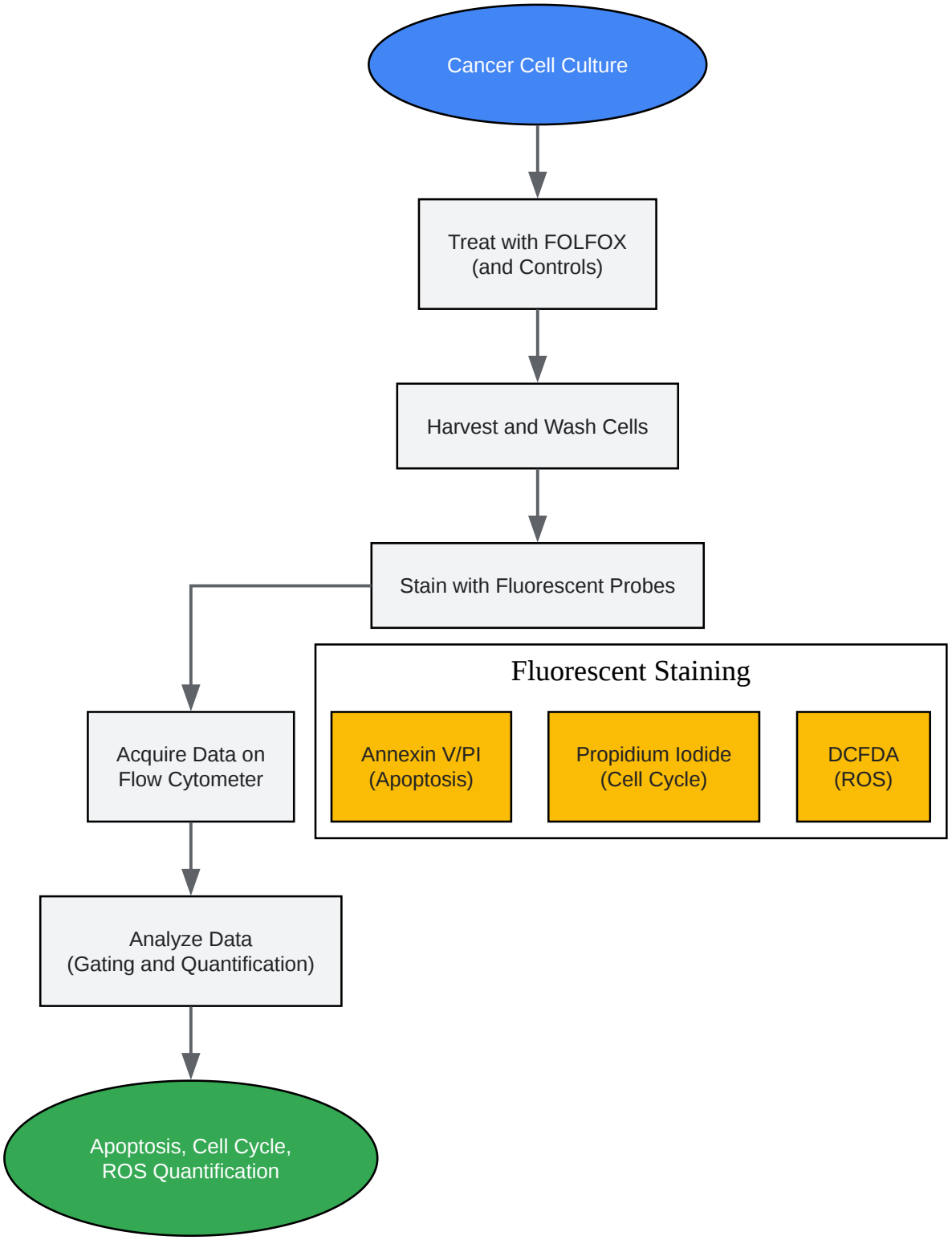

Click to download full resolution via product page

Experimental Workflow for Flow Cytometry

© 2026 BenchChem. All rights reserved.

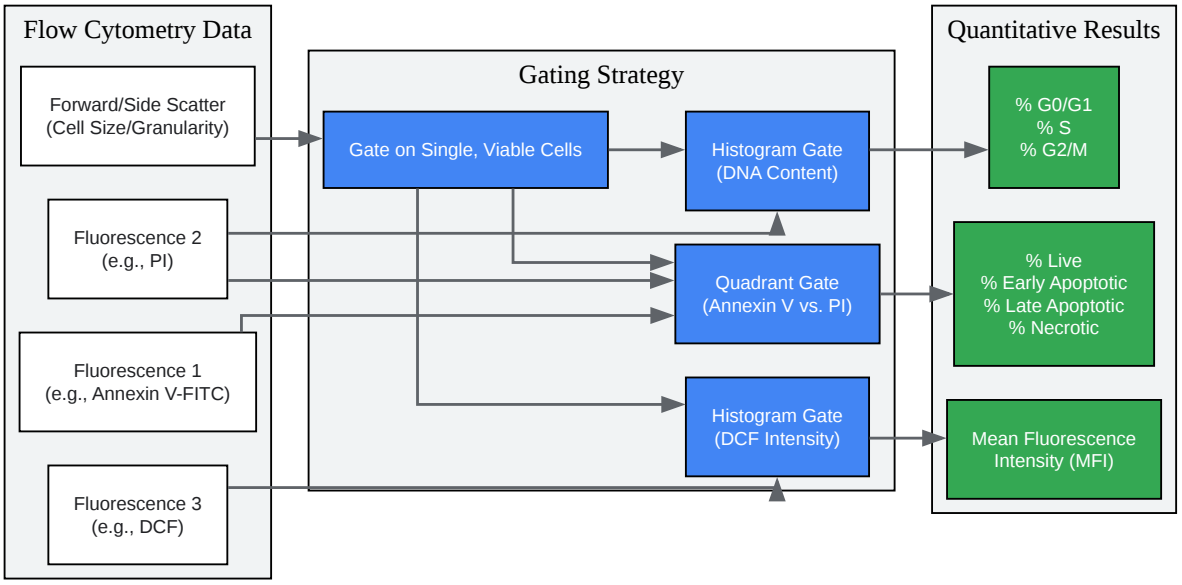

Click to download full resolution via product page

Data Interpretation Logic

Experimental Protocols

Protocol 1: Analysis of Apoptosis using Annexin V and Propidium Iodide (PI) Staining

This protocol is for the detection of apoptosis by flow cytometry using Annexin V to identify the externalization of phosphatidylserine, an early marker of apoptosis, and propidium iodide (PI) to differentiate between viable, early apoptotic, late apoptotic, and necrotic cells.[1]

Materials:

- Annexin V-FITC (or other fluorochrome conjugate)
- Propidium Iodide (PI)

© 2026 BenchChem. All rights reserved.

- 1X Binding Buffer (10 mM Hepes, pH 7.4, 140 mM NaCl, 2.5 mM CaCl2)
- Phosphate-Buffered Saline (PBS)
- FACS tubes
- Micropipettes and tips
- Centrifuge
- Flow cytometer

Procedure:

- Cell Preparation: Culture colorectal cancer cells to the desired confluency and treat with FOLFOX or vehicle control for the desired time period.
- Harvesting: Harvest cells by trypsinization (for adherent cells) or by gentle scraping. Include the culture medium containing any floating cells.
- Washing: Centrifuge the cell suspension at 300 x g for 5 minutes. Discard the supernatant and wash the cells twice with cold PBS.
- Resuspension: Resuspend the cell pellet in 1X Binding Buffer to a concentration of 1 x 10^6 cells/mL.
- Staining:
  - Transfer 100 µL of the cell suspension (1 x 10^5 cells) to a FACS tube.
  - Add 5 µL of Annexin V-FITC and 5 µL of PI.
  - Gently vortex the cells and incubate for 15 minutes at room temperature in the dark.
- Analysis:
  - Add 400 µL of 1X Binding Buffer to each tube.
  - Analyze the samples by flow cytometry within one hour.

© 2026 BenchChem. All rights reserved.

- Use unstained, Annexin V-FITC only, and PI only stained cells as controls to set up compensation and quadrants.

Data Interpretation:

- Annexin V- / PI-: Live cells
- Annexin V+ / PI-: Early apoptotic cells
- Annexin V+ / PI+: Late apoptotic or necrotic cells
- Annexin V- / PI+: Necrotic cells

Protocol 2: Cell Cycle Analysis using Propidium Iodide (PI) Staining

This protocol describes the analysis of cell cycle distribution by staining the DNA of fixed and permeabilized cells with propidium iodide.[2][3][4]

Materials:

- Propidium Iodide (PI) staining solution (e.g., 50 µg/mL PI, 0.1% Triton X-100, 0.1% sodium citrate, and 100 µg/mL RNase A in PBS)
- 70% Ethanol, ice-cold
- Phosphate-Buffered Saline (PBS)
- FACS tubes
- Micropipettes and tips
- Centrifuge
- Vortex mixer
- Flow cytometer

© 2026 BenchChem. All rights reserved.

Procedure:

- Cell Preparation and Harvesting: Culture and treat cells as described in Protocol 1, then harvest.
- Washing: Wash the cells once with PBS.
- Fixation:
  - Resuspend the cell pellet in 0.5 mL of cold PBS.
  - While gently vortexing, add 4.5 mL of ice-cold 70% ethanol dropwise to the cell suspension.
  - Incubate the cells on ice for at least 30 minutes (or store at -20°C for longer periods).
- Staining:
  - Centrifuge the fixed cells at 850 x g for 5 minutes and discard the ethanol.
  - Wash the cell pellet with PBS.
  - Resuspend the cell pellet in 500 µL of PI staining solution.
  - Incubate for 30 minutes at room temperature in the dark.
- Analysis:
  - Analyze the samples by flow cytometry.
  - Acquire data in linear mode for the PI signal.
  - Use software with a cell cycle analysis model (e.g., Dean-Jett-Fox) to deconvolute the DNA content histogram and quantify the percentage of cells in G0/G1, S, and G2/M phases.

Protocol 3: Measurement of Intracellular Reactive Oxygen Species (ROS) using 2',7'-

© 2026 BenchChem. All rights reserved.

Dichlorodihydrofluorescein Diacetate (DCFDA)

This protocol outlines the measurement of intracellular ROS using the cell-permeable probe DCFDA, which becomes fluorescent upon oxidation by ROS.[5][6]

Materials:

- 2',7'-Dichlorodihydrofluorescein Diacetate (DCFDA) stock solution (e.g., 10 mM in DMSO)
- Serum-free cell culture medium or PBS
- FACS tubes
- Micropipettes and tips
- Centrifuge
- Flow cytometer
- Positive control (e.g., H2O2) and negative control (e.g., N-acetylcysteine, NAC)

Procedure:

- Cell Preparation: Culture cells to the desired confluency.
- Staining:
  - Prepare a fresh working solution of DCFDA (e.g., 5-10 µM) in pre-warmed serum-free medium or PBS.
  - Remove the culture medium and wash the cells once with PBS.
  - Add the DCFDA working solution to the cells and incubate for 30 minutes at 37°C in the dark.
- Treatment:
  - Remove the DCFDA solution and wash the cells once with PBS.

© 2026 BenchChem. All rights reserved.

- Add fresh, pre-warmed culture medium containing FOLFOX, vehicle control, positive control (H2O2), or negative control (NAC followed by FOLFOX).
- Incubate for the desired treatment period.

- Harvesting and Analysis:
  - Harvest the cells as described in Protocol 1.
  - Resuspend the cells in cold PBS.
  - Analyze the samples immediately by flow cytometry, measuring the fluorescence in the FITC channel.

Data Interpretation:

- The increase in the mean fluorescence intensity (MFI) of the DCF signal in treated cells compared to the control cells is indicative of an increase in intracellular ROS levels.

Conclusion

Flow cytometry is a powerful and versatile platform for elucidating the cellular mechanisms of action of chemotherapeutic regimens like FOLFOX. The protocols and data presented here provide a framework for researchers to quantitatively assess apoptosis, cell cycle arrest, and oxidative stress in cancer cells following treatment. This information is crucial for understanding drug efficacy, identifying mechanisms of resistance, and developing novel therapeutic strategies in the fight against colorectal cancer.

Need Custom Synthesis?

BenchChem offers custom synthesis for rare earth carbides and specific isotopiclabeling.

Email: info@benchchem.com or Request Quote Online.

References

- 1. biorxiv.org [biorxiv.org]

- 2. researchgate.net [researchgate.net]
- 3. researchgate.net [researchgate.net]
- 4. researchgate.net [researchgate.net]
- 5. Cytotoxic activity and apoptosis induction by supernatant of Lentilactobacillus buchneri on HT-29 colon cancer cells - PMC [pmc.ncbi.nlm.nih.gov]
- 6. researchgate.net [researchgate.net]
- To cite this document: BenchChem. [Analyzing the Cellular Impact of FOLFOX Chemotherapy using Flow Cytometry]. BenchChem, [2026]. [Online PDF]. Available at: [https://www.benchchem.com/product/b1180844/docs#analyzing-the-cellular-impact-of-folfox-chemotherapy-using-flow-cytometry]

Disclaimer & Data Validity:

The information provided in this document is for Research Use Only (RUO) and is strictly not intended for diagnostic or therapeutic procedures. While BenchChem strives to provide accurate protocols, we make no warranties, express or implied, regarding the fitness of this product for every specific experimental setup.

Technical Support: The protocols provided are for reference purposes. Unsure if this reagent suits your experiment?

Need Industrial/Bulk Grade? Request Custom Synthesis Quote

BenchChem

Our mission is to be the trusted global source of essential and advanced chemicals, empowering scientists and researchers to drive progress in science and industry.

Contact

Address: 3281 E Guasti Rd

Ontario, CA 91761, United States

Phone: (601) 213-4426

Email: info@benchchem.com

Contact our Ph.D. Support Team for a compatibility check

© 2026 BenchChem. All rights reserved.