A Comparative Guide to Inter-Laboratory Quantification of Hypogeic Acid

Author: BenchChem Technical Support Team. **Date**: April 2026

Compound of Interest

Compound Name: *Hypogeic acid*

Cat. No.: *B11723514*

Get Quote

For Researchers, Scientists, and Drug Development Professionals

This guide provides a comprehensive comparison of prevalent analytical methodologies for the quantification of **hypogeic acid**, a C16:1 monounsaturated omega-9 fatty acid. In the absence of a formal inter-laboratory comparison study specifically for **hypogeic acid**, this document synthesizes best practices and common findings from the broader field of fatty acid analysis. The objective is to equip researchers with the necessary information to select appropriate methods, design robust validation studies, and interpret cross-laboratory data with greater confidence.

Introduction to **Hypogeic Acid** Analysis

Hypogeic acid ((7E)-hexadec-7-enoic acid) is a positional isomer of palmitoleic acid with emerging interest in metabolic research.[1] Accurate and reproducible quantification across different laboratories is crucial for understanding its physiological roles. The primary analytical techniques for fatty acid analysis, and by extension **hypogeic acid**, are Gas Chromatography (GC) and High-Performance Liquid Chromatography (HPLC), often coupled with Mass Spectrometry (MS).[2][3][4]

© 2026 BenchChem. All rights reserved.

Data Presentation: A Simulated Inter-Laboratory Comparison

While no direct inter-laboratory study on **hypogeic acid** was identified, the following table simulates expected outcomes based on established fatty acid quality assurance programs.[5] [6] This table illustrates potential variability and performance characteristics of common analytical methods.

Table 1: Simulated Inter-laboratory Comparison of **Hypogeic Acid** Quantification in Human Plasma (µg/mL)

Laboratory ID	Analytical Method	Extraction Method	Derivatization	Mean Concentration (µg/mL)	Standard Deviation (SD)	Coefficient of Variation (CV%)
Lab A	GC-FID	Folch	BF3/Methanol	1.25	0.11	8.8
Lab B	GC-MS (SIM)	Bligh-Dyer	Diazomethane	1.18	0.09	7.6
Lab C	UPLC-MS/MS	MTBE	None	1.32	0.10	7.6
Lab D	GC-FID	Folch	BF3/Methanol	1.41	0.18	12.8
Lab E	LC-MS	Ethyl Acetate	None	1.35	0.15	11.1
Lab F	GC-MS/MS	Bligh-Dyer	BSTFA	1.22	0.08	6.6

This data is hypothetical and for illustrative purposes only.

Experimental Protocols

Detailed methodologies are critical for reproducibility. Below are generalized protocols for the most common analytical approaches.

© 2026 BenchChem. All rights reserved.

Gas Chromatography (GC) Based Methods

GC is a robust and widely used technique for fatty acid analysis, offering high resolution and sensitivity.[3][7] A critical prerequisite for GC analysis of fatty acids is their conversion into volatile fatty acid methyl esters (FAMEs).[7][8]

a) Lipid Extraction (Folch Method)

- Principle: Extraction and partitioning of lipids from a biological sample using a chloroform/methanol solvent system.
- Procedure:
  - Homogenize the sample (e.g., 100 µL of plasma) with a 2:1 (v/v) mixture of chloroform and methanol.
  - Vortex thoroughly and allow the mixture to stand to ensure complete lipid extraction.
  - Add an aqueous salt solution (e.g., 0.9% NaCl) to induce phase separation.
  - Centrifuge to pellet any precipitated protein and clarify the two phases.
  - Carefully collect the lower chloroform layer containing the lipids.
  - Evaporate the solvent under a stream of nitrogen.

b) Saponification and Derivatization (to FAMEs)

- Principle: Free fatty acids are liberated from complex lipids via saponification (alkaline hydrolysis), followed by esterification to form volatile methyl esters.
- Procedure using Boron Trifluoride (BF3)-Methanol:
  - Re-dissolve the extracted lipid residue in a known volume of toluene.
  - Add methanolic sodium hydroxide and heat to saponify the lipids.
  - After cooling, add BF3-methanol reagent and heat again to methylate the free fatty acids.

© 2026 BenchChem. All rights reserved.

- Cool the mixture and add a non-polar solvent (e.g., hexane) and water.
- Vortex and centrifuge to separate the phases.
- The upper hexane layer containing the FAMEs is collected for GC analysis.

c) GC-FID/MS Analysis

- Instrumentation: A gas chromatograph equipped with a flame ionization detector (FID) or a mass spectrometer (MS).
- Column: A polar capillary column (e.g., a cyanopropyl siloxane phase) is typically used for FAME separation.[3]
- Injection: 1 µL of the FAME extract is injected into the GC inlet.
- Operating Conditions (Typical):
  - Carrier Gas: Helium or Hydrogen.[9]
  - Inlet Temperature: 250°C.
  - Oven Program: Start at a lower temperature (e.g., 100°C), hold, then ramp up to a final temperature (e.g., 240°C) to elute all FAMEs.
  - Detector Temperature (FID): 275°C.
  - MS Conditions: For MS detection, either full scan mode for identification or selected ion monitoring (SIM) for enhanced sensitivity and quantification can be used.

Liquid Chromatography (LC) Based Methods

LC methods, particularly when coupled with tandem mass spectrometry (LC-MS/MS), offer the advantage of analyzing free fatty acids directly without derivatization, which can reduce sample preparation time and avoid potential degradation of sensitive compounds.[2][4][10]

a) Lipid Extraction (Bligh-Dyer Method)

- Principle: A modified single-phase extraction using a methanol/chloroform/water mixture.[11]

© 2026 BenchChem. All rights reserved.

- Procedure:
  - To the aqueous sample (e.g., 100 µL plasma), add a 1:2:0.8 (v/v/v) mixture of chloroform/methanol/water.
  - Vortex to create a single-phase mixture and allow for lipid extraction.
  - Add additional chloroform and water to break the mixture into two phases.
  - Centrifuge to separate the phases.
  - Collect the lower chloroform layer containing the lipids.
  - Dry the extract under nitrogen.

b) UPLC-MS/MS Analysis

- Instrumentation: An ultra-high performance liquid chromatograph coupled to a tandem mass spectrometer (e.g., a triple quadrupole).
- Column: A reversed-phase column (e.g., C18) is commonly used, separating fatty acids based on their hydrophobicity (chain length and degree of unsaturation).[10]
- Mobile Phase: A gradient of two solvents is typically used, for example:
  - Solvent A: Water with a small amount of additive like formic acid or ammonium acetate.
  - Solvent B: Acetonitrile/Isopropanol mixture.
- Analysis:
  - Reconstitute the dried lipid extract in the initial mobile phase composition.
  - Inject the sample into the UPLC system.
  - The fatty acids are separated on the column and then detected by the mass spectrometer.
  - MS Detection: Electrospray ionization (ESI) in negative mode is typically used for the detection of free fatty acids.[10] Multiple Reaction Monitoring (MRM) is employed for high

© 2026 BenchChem. All rights reserved.

selectivity and sensitivity, where a specific precursor ion (the deprotonated molecule $[M-H]^-$) and a characteristic product ion are monitored for **hypogeic acid**.

Mandatory Visualizations

The following diagrams illustrate the workflows and concepts discussed.

© 2026 BenchChem. All rights reserved.

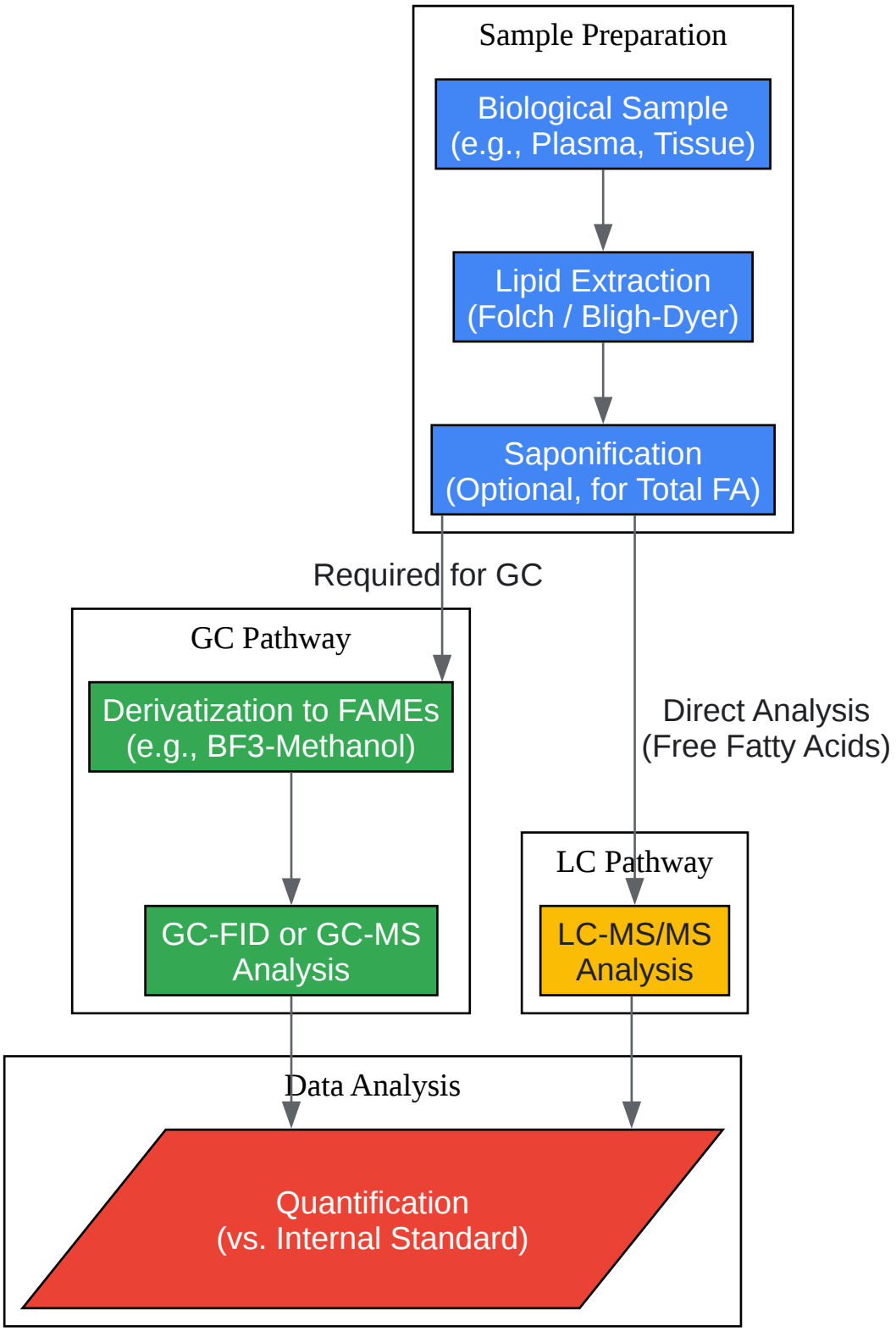

© 2026 BenchChem. All rights reserved.

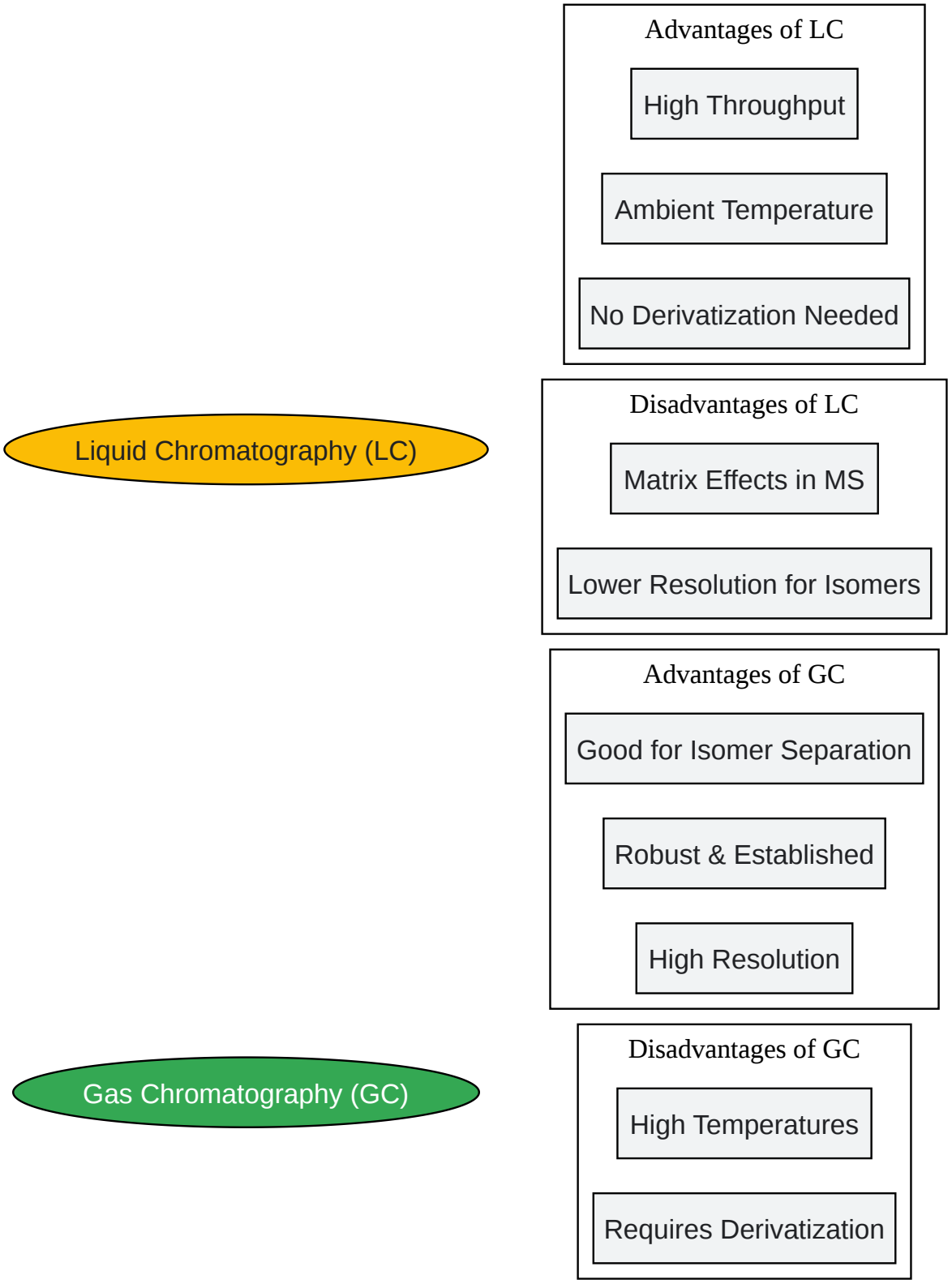

Click to download full resolution via product page

© 2026 BenchChem. All rights reserved.

Need Custom Synthesis?

BenchChem offers custom synthesis for rare earth carbides and specific isotopiclabeling.

Email: info@benchchem.com or Request Quote Online.

References

- 1. mdpi.com [mdpi.com]
- 2. hplc.eu [hplc.eu]
- 3. aquaculture.ugent.be [aquaculture.ugent.be]
- 4. aocs.org [aocs.org]
- 5. Interlaboratory analytical comparison of fatty acid concentrations in serum or plasma - PubMed [pubmed.ncbi.nlm.nih.gov]
- 6. Interlaboratory Analytical Comparison of Fatty Acid Concentrations in Serum or Plasma - PMC [pmc.ncbi.nlm.nih.gov]
- 7. BISC 429 [sfu.ca]
- 8. diverdi.colostate.edu [diverdi.colostate.edu]
- 9. Analysis of Fatty Acid Composition by Gas Chromatography Using Hydrogen or Nitrogen as an Alternative Carrier Gas to Helium: a JOCS Collaborative Study - PubMed [pubmed.ncbi.nlm.nih.gov]
- 10. Analytical Methods for the Determination of Fatty Acid Esters of Hydroxy Fatty Acids (FAHFAs) in Biological Samples, Plants and Foods - PMC [pmc.ncbi.nlm.nih.gov]
- 11. dkfz.de [dkfz.de]
- To cite this document: BenchChem. [A Comparative Guide to Inter-Laboratory Quantification of Hypogeic Acid]. BenchChem, [2026]. [Online PDF]. Available at: [https://www.benchchem.com/product/b11723514/docs#a-comparative-guide-to-inter-laboratory-quantification-of-hypogeic-acid]

Disclaimer & Data Validity:

The information provided in this document is for Research Use Only (RUO) and is strictly not intended for diagnostic or therapeutic procedures. While BenchChem strives to provide

accurate protocols, we make no warranties, express or implied, regarding the fitness of this product for every specific experimental setup.

Technical Support: The protocols provided are for reference purposes. Unsure if this reagent suits your experiment?

Need Industrial/Bulk Grade? Request Custom Synthesis Quote

BenchChem

Our mission is to be the trusted global source of essential and advanced chemicals, empowering scientists and researchers to drive progress in science and industry.

Contact

Address: 3281 E Guasti Rd

Ontario, CA 91761, United States

Phone: (601) 213-4426

Email: info@benchchem.com

Contact our Ph.D. Support Team for a compatibility check

© 2026 BenchChem. All rights reserved.