Validating PAL-Based Vaccine Efficacy: A Comparative Guide for Researchers

Author: BenchChem Technical Support Team. **Date**: May 2026

Compound of Interest

Compound Name:	*peptidoglycan-associated lipoprotein*
CAS No.:	*107761-78-4*
Cat. No.:	*B1167460*

Get Quote

For researchers, scientists, and drug development professionals, this guide provides an objective comparison of the performance of **Peptidoglycan-Associated Lipoprotein** (PAL)-based vaccines with other alternatives, supported by experimental data from mouse models.

PAL-based vaccines, which utilize liposomes to deliver peptide antigens, have emerged as a promising platform for inducing robust immune responses against various diseases, including cancer and infectious agents. This guide summarizes key efficacy data, details the experimental protocols used to generate this data, and visualizes the underlying immunological pathways and experimental workflows.

Data Presentation: Efficacy of PAL-Based Vaccines in Mouse Models

The following tables summarize quantitative data from various studies, showcasing the efficacy of PAL-based vaccines in preclinical mouse models.

© 2026 BenchChem. All rights reserved.

Vaccine Platform	Antigen	Mouse Model	Key Efficacy Metrics	Outcome	Reference
PAL-based (Cationic Liposome)	HPV E7 SLP	C57BL/6	Tumor Volume, Survival Rate	Cured 75-100% of mice with large established tumors.	[1]
PAL-based (Nanoliposome)	VEGFR-2 peptides	C57BL/6 (B16F10 melanoma)	Tumor Volume, Survival Rate, IFN-γ and IL-4 production	Significant decrease in tumor volume and enhanced survival.	[2]
PAL-based (Nanoliposome)	anti-PCSK9 peptide	BALB/c (Colorectal cancer)	Tumor Volume, Survival Rate	87.7% lower tumor volume compared to control.	[2]
mRNA-LNP	Neoantigens	C57BL/6 (Lewis Lung Carcinoma)	T-cell response, Tumor growth	Superior anti-tumor activity compared to synthetic long peptides.	[3]
Adenoviral Vector	Influenza HA and NP	BALB/c	Lung viral titers	Significant reduction in lung virus titers against multiple influenza subtypes.	[4]

© 2026 BenchChem. All rights reserved.

Assay	PAL-based Vaccine Response	Alternative Vaccine Response (if available)
Antigen-Specific IgG Titer	High titers induced against various antigens.	mRNA and Adenoviral vectors also induce high IgG titers.
Cytotoxic T-lymphocyte (CTL) Response	Strong induction of antigen-specific CD8+ T cells with high in vivo killing capacity.[1]	mRNA vaccines are also known to elicit robust CD8+ T cell responses.[3]
T-helper Cell (Th) Response	Skewing towards Th1/Th17 phenotypes, crucial for anti-tumor and anti-viral immunity.	Adenoviral vectors can also induce Th1-biased responses.
Cytokine Production	Increased production of IFN-γ, TNF-α, and IL-12.	Similar pro-inflammatory cytokine profiles observed with other potent vaccine platforms.

Experimental Protocols

Detailed methodologies for key experiments are provided below to facilitate the replication and validation of these findings.

Mouse Immunization and Challenge Study

This protocol outlines the general procedure for vaccinating mice and challenging them with a pathogen or tumor cells to assess vaccine efficacy.

Materials:

- PAL-based vaccine formulation
- Control vaccine or vehicle (e.g., PBS)
- Syringes and needles (e.g., 27-30 gauge)
- Pathogen or tumor cell line
- Appropriate mouse strain (e.g., C57BL/6, BALB/c)

© 2026 BenchChem. All rights reserved.

- Anesthetic (e.g., isoflurane)

Procedure:

- Animal Acclimation: Acclimate mice to the facility for at least one week prior to the experiment.
- Vaccination:
  - Prepare the vaccine formulation on the day of injection.
  - Immunize mice via the desired route (e.g., subcutaneous, intramuscular, intradermal). A typical prime-boost strategy involves an initial vaccination (Day 0) followed by a booster dose 2-3 weeks later.[5]
  - Administer a specific dose of the peptide antigen, typically in the range of 10-100 µg per mouse, in a volume of 50-100 µL.
- Challenge:
  - Two to four weeks after the final vaccination, challenge the mice with a lethal or sub-lethal dose of the pathogen or a specific number of tumor cells.
- Monitoring:
  - Monitor the mice daily for signs of illness, weight loss, and survival.
  - For tumor models, measure tumor volume regularly using calipers or an in vivo imaging system.[6][7][8][9][10][11]
- Endpoint Analysis:
  - At a predetermined endpoint or when humane endpoints are reached, euthanize the mice.
  - Collect tissues (e.g., spleen, lymph nodes, tumor, lungs) for further analysis.

© 2026 BenchChem. All rights reserved.

Enzyme-Linked Immunospot (ELISpot) Assay for Cytokine-Secreting Cells

This assay quantifies the number of antigen-specific T cells that secrete a particular cytokine (e.g., IFN-γ).

Materials:

- ELISpot plates (e.g., PVDF-bottomed 96-well plates)
- Capture and detection antibodies for the cytokine of interest
- Streptavidin-enzyme conjugate (e.g., ALP or HRP)
- Substrate for the enzyme
- Spleens or lymph nodes from immunized mice
- Antigenic peptide
- Cell culture medium and supplements

Procedure:

- Plate Coating: Coat the ELISpot plate with the capture antibody overnight at 4°C.
- Cell Preparation: Prepare a single-cell suspension from the spleens or lymph nodes of immunized mice.
- Cell Stimulation: Add the splenocytes to the coated and blocked wells along with the specific antigenic peptide. Include positive (mitogen) and negative (no peptide) controls.
- Incubation: Incubate the plate at 37°C in a CO_2 incubator for 18-24 hours.
- Detection:
  - Wash the wells to remove the cells.

© 2026 BenchChem. All rights reserved.

  - Add the biotinylated detection antibody and incubate.
  - Add the streptavidin-enzyme conjugate and incubate.
  - Add the substrate to develop the spots.
- Analysis: Wash and dry the plate. Count the spots using an ELISpot reader. Each spot represents a single cytokine-secreting cell.

Enzyme-Linked Immunosorbent Assay (ELISA) for Antibody Titer

This assay measures the concentration of antigen-specific antibodies in the serum of immunized mice.

Materials:

- ELISA plates (e.g., high-binding 96-well plates)
- Antigen
- Serum samples from immunized mice
- Detection antibody (e.g., anti-mouse IgG conjugated to an enzyme)
- Substrate for the enzyme
- Wash and blocking buffers

Procedure:

- Plate Coating: Coat the ELISA plate with the antigen overnight at 4°C.
- Blocking: Block the plate with a blocking buffer (e.g., BSA or non-fat milk) to prevent non-specific binding.
- Sample Incubation: Add serial dilutions of the mouse serum to the wells and incubate.
- Detection Antibody: Add the enzyme-conjugated detection antibody and incubate.

© 2026 BenchChem. All rights reserved.

- Development: Add the substrate and allow the color to develop.
- Reading: Stop the reaction and read the absorbance at the appropriate wavelength using a plate reader. The antibody titer is determined as the reciprocal of the highest dilution that gives a positive signal.

Mandatory Visualization: Signaling Pathways and Experimental Workflows

The following diagrams, created using the DOT language for Graphviz, illustrate key signaling pathways and experimental workflows relevant to the validation of PAL-based vaccines.

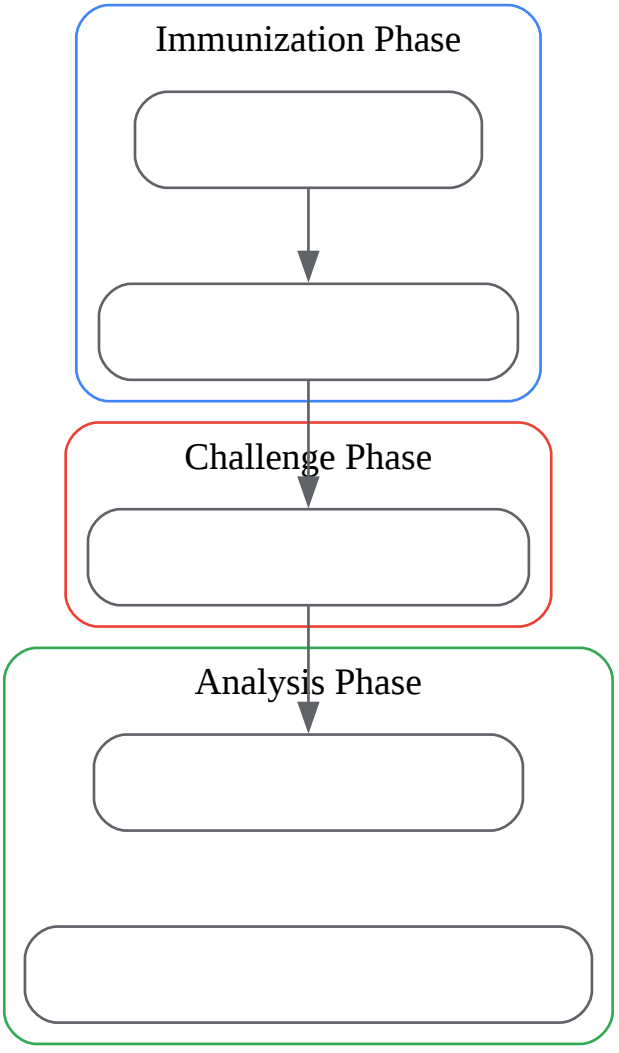

Click to download full resolution via product page

© 2026 BenchChem. All rights reserved.

Caption: Experimental workflow for a prime-boost immunization and challenge study in a mouse model.

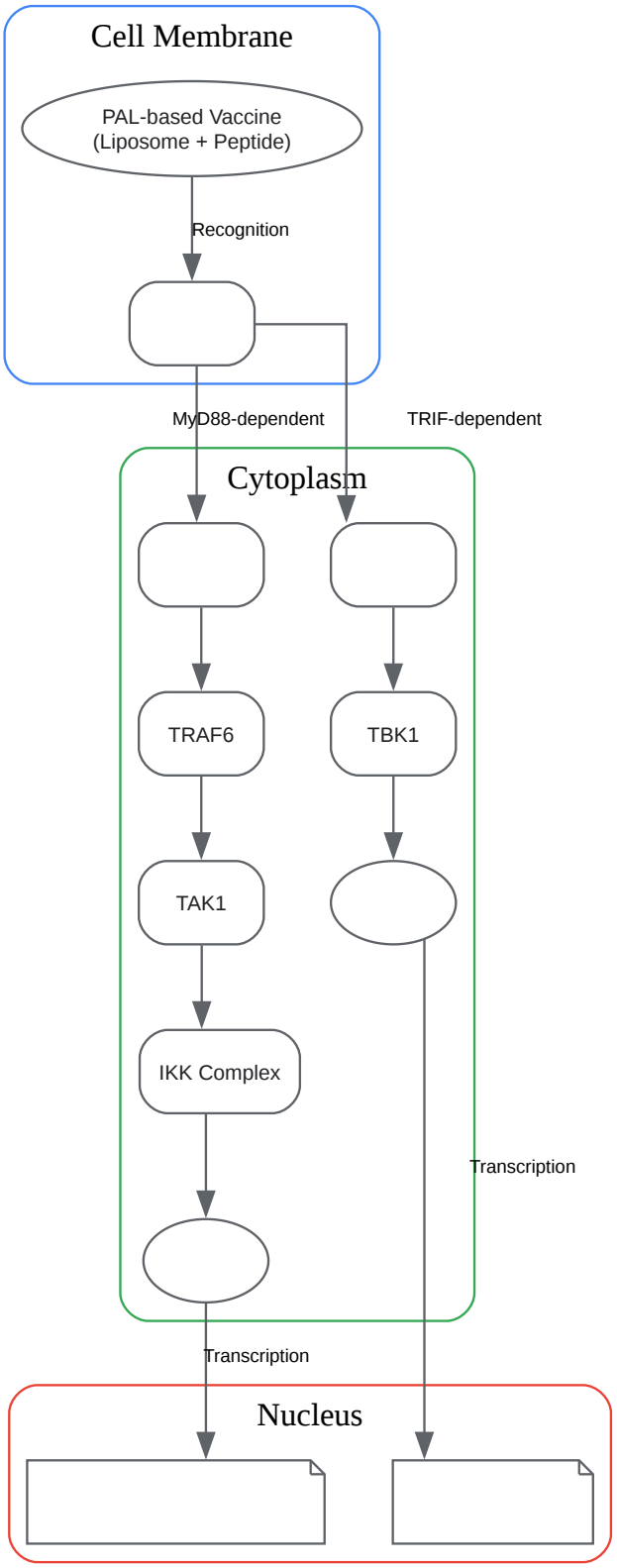

Click to download full resolution via product page

Caption: Simplified TLR4 signaling pathway in a dendritic cell activated by a PAL-based vaccine.[5][12][13][14][15][16][17][18][19][20]

This guide provides a foundational understanding of the validation of PAL-based vaccines in mouse models. The presented data and protocols are intended to assist researchers in designing and interpreting their own studies in the dynamic field of vaccine development.

Need Custom Synthesis?

BenchChem offers custom synthesis for rare earth carbides and specific isotopiclabeling.

Email: info@benchchem.com or Request Quote Online.

References

- 1. aacrjournals.org [aacrjournals.org]
- 2. Potential anti-tumor effect of a nanoliposomal antiPCSK9 vaccine in mice bearing colorectal cancer - PMC [pmc.ncbi.nlm.nih.gov]
- 3. Neoantigen-based mRNA vaccine exhibits superior anti-tumor activity compared to synthetic long peptides in an in vivo lung carcinoma model | springermedizin.de [springermedizin.de]
- 4. mdpi.com [mdpi.com]
- 5. Frontiers | Toll-Like Receptor Signaling Pathways [frontiersin.org]
- 6. In vivo Bioluminescence Imaging of Luciferase-labeled Cancer Cells [bio-protocol.org]
- 7. Imaging Tumor Cell Movement In Vivo - PMC [pmc.ncbi.nlm.nih.gov]
- 8. benchchem.com [benchchem.com]
- 9. creative-bioarray.com [creative-bioarray.com]
- 10. spectralinvivo.com [spectralinvivo.com]
- 11. Liposomal Dendritic Cell Vaccine in Breast Cancer Immunotherapy - PMC [pmc.ncbi.nlm.nih.gov]
- 12. researchgate.net [researchgate.net]
- 13. researchgate.net [researchgate.net]

© 2026 BenchChem. All rights reserved.

- 14. researchgate.net [researchgate.net]
- 15. researchgate.net [researchgate.net]
- 16. researchgate.net [researchgate.net]
- 17. Frontiers | Tolerogenic dendritic cells and TLR4/IRAK4/NF-κB signaling pathway in allergic rhinitis [frontiersin.org]
- 18. Frontiers | MyD88-dependent signaling drives toll-like receptor-induced trained immunity in macrophages [frontiersin.org]
- 19. researchgate.net [researchgate.net]
- 20. Tolerogenic dendritic cells and TLR4/IRAK4/NF-κB signaling pathway in allergic rhinitis - PMC [pmc.ncbi.nlm.nih.gov]

- To cite this document: BenchChem. [Validating PAL-Based Vaccine Efficacy: A Comparative Guide for Researchers]. BenchChem, [2026]. [Online PDF]. Available at: [https://www.benchchem.com/product/b1167460/docs#validating-pal-based-vaccine-efficacy-a-comparative-guide-for-researchers]

Disclaimer & Data Validity:

The information provided in this document is for Research Use Only (RUO) and is strictly not intended for diagnostic or therapeutic procedures. While BenchChem strives to provide accurate protocols, we make no warranties, express or implied, regarding the fitness of this product for every specific experimental setup.

Technical Support: The protocols provided are for reference purposes. Unsure if this reagent suits your experiment?

Need Industrial/Bulk Grade? Request Custom Synthesis Quote

BenchChem

Our mission is to be the trusted global source of essential and advanced chemicals, empowering scientists and researchers to drive progress in science and industry.

Contact

Address: 3281 E Guasti Rd

Ontario, CA 91761, United States

Phone: (601) 213-4426

Email: info@benchchem.com

© 2026 BenchChem. All rights reserved.

Contact our Ph.D. Support Team for a compatibility check

© 2026 BenchChem. All rights reserved.