A Comparative Guide to In Vivo Validation of the RodA-PBP2 Interaction

Author: BenchChem Technical Support Team. **Date**: April 2026

Compound of Interest

Compound Name:	*RodA protein*
CAS No.:	*123449-22-9*
Cat. No.:	*B1167272*

Get Quote

For Researchers, Scientists, and Drug Development Professionals

The interaction between the glycosyltransferase RodA and the transpeptidase PBP2 is fundamental to bacterial cell wall synthesis and a key target for novel antibiotic development. Validating this interaction in vivo is crucial for understanding its biological relevance and for screening potential inhibitors. This guide provides a comparative overview of key experimental methods used to study the RodA-PBP2 interaction within a cellular context, complete with experimental data, detailed protocols, and workflow visualizations.

Comparison of In Vivo Validation Methods

Several powerful techniques can be employed to investigate the RodA-PBP2 interaction in vivo. Each method offers distinct advantages and disadvantages in terms of sensitivity, throughput, and the nature of the interaction it detects.

© 2026 BenchChem. All rights reserved.

Method	Principle	Quantitative Data Example for RodA-PBP2	Pros	Cons
Bacterial Two-Hybrid (B2H)	Reconstitution of a reporter protein's activity (e.g., adenylate cyclase) by the interaction of two proteins fused to its separate domains.	Interaction between S. mutans MreC/MreD and RodA/PBP2 has been shown using a B2H system, though specific quantitative data for the direct RodA-PBP2 interaction is not readily available in literature.[1]	- High-throughput screening capability.- Relatively simple and cost-effective.- Suitable for detecting interactions with membrane-associated proteins.[2][3]	- Prone to false positives and negatives.- Fusion tags may interfere with protein function or localization.- Indirect interactions can be missed.
Co-Immunoprecipitation (Co-IP)	Isolation of a target protein and its binding partners from a cell lysate using a specific antibody.	While widely used for protein-protein interactions, specific quantitative Co-IP data for the RodA-PBP2 interaction is not prominently published. However, the technique is considered a "gold standard" for confirming interactions in vivo.	- Detects interactions in a near-native cellular environment.- Can identify entire protein complexes.- High specificity when using high-quality antibodies.[4]	- Antibody quality is critical and can be a limiting factor.- Transient or weak interactions may be lost during washing steps.- Optimization of lysis and wash conditions is often required, especially for membrane proteins.[5][6]

© 2026 BenchChem. All rights reserved.

Förster Resonance Energy Transfer (FRET)	Non-radiative energy transfer between two fluorescent proteins (donor and acceptor) fused to interacting proteins.	The interaction between mCherry-RodA and mKO-PBP2 in E. coli yielded a FRET efficiency (EfA) of 12.7 ± 1.7%. This interaction was slightly reduced to 10.9 ± 0.5% when an inactive PBP2 mutant (PBP2 S330C) was used, suggesting the interaction is independent of PBP2's catalytic activity.[7]	- Provides spatial information about protein proximity in living cells.- Can detect dynamic changes in protein interactions in real-time.- High sensitivity for direct interactions within 1-10 nm.	- Requires fusion with fluorescent proteins, which can affect protein function.- Susceptible to issues like fluorophore bleaching and spectral bleed-through.- Technically demanding in terms of microscopy and data analysis.
In Vivo Cross-linking with Mass Spectrometry (XL-MS)	Covalent linking of interacting proteins within living cells, followed by purification and identification of the cross-linked peptides by mass spectrometry.	While not specifically documented for RodA-PBP2, this method has been successfully used to study the cellular interactome of bacteria like Neisseria meningitidis, identifying numerous protein-protein interactions.[2]	- Captures transient and weak interactions.- Provides information on the interaction interface.- Can be applied on a proteome-wide scale.[2][8]	- Can generate complex datasets requiring sophisticated analysis.- Cross-linker accessibility can be a limitation.- May produce artifacts if cross-linking conditions are not optimized.

© 2026 BenchChem. All rights reserved.

Signaling Pathway and Experimental Workflows

To better visualize the cellular context and the experimental approaches, the following diagrams illustrate the RodA-PBP2 interaction pathway and the workflows for the discussed validation methods.

© 2026 BenchChem. All rights reserved.

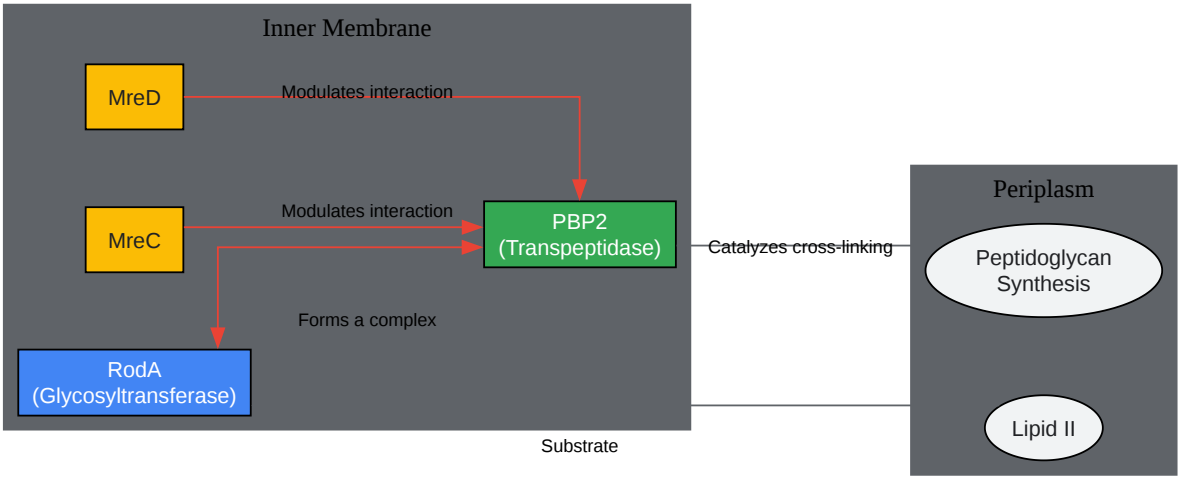

© 2026 BenchChem. All rights reserved.

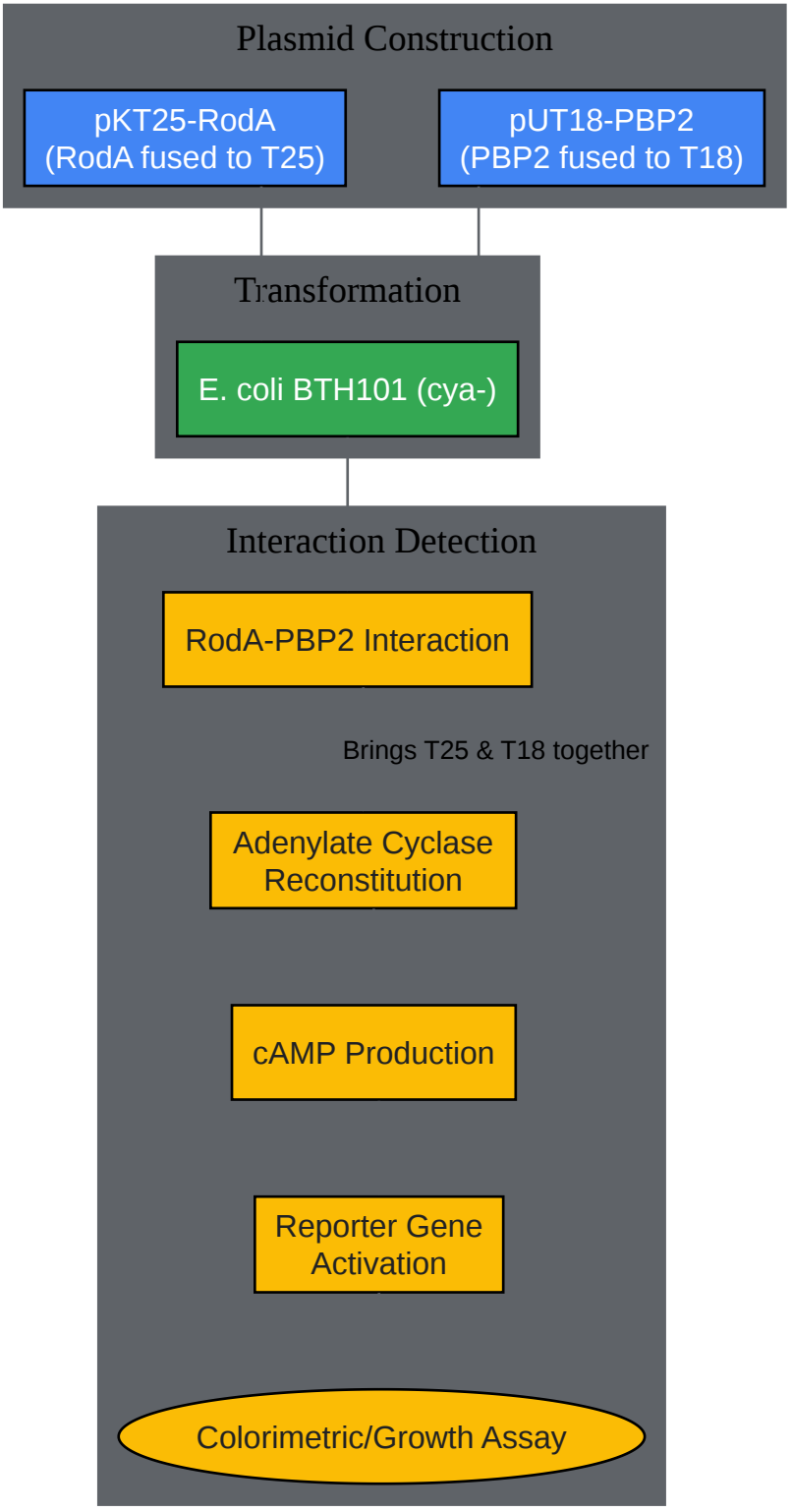

© 2026 BenchChem. All rights reserved.

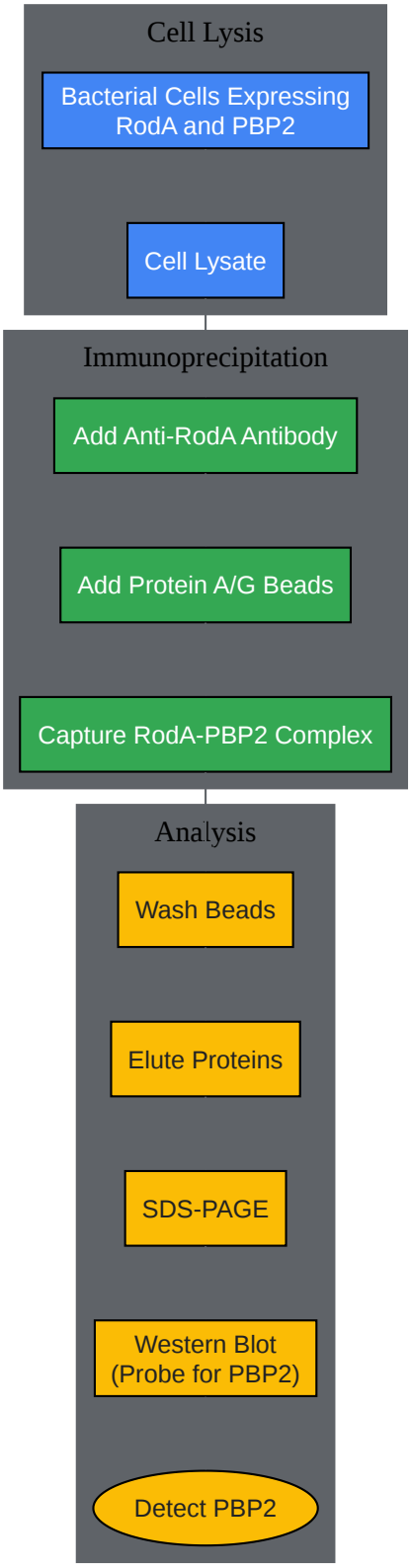

© 2026 BenchChem. All rights reserved.

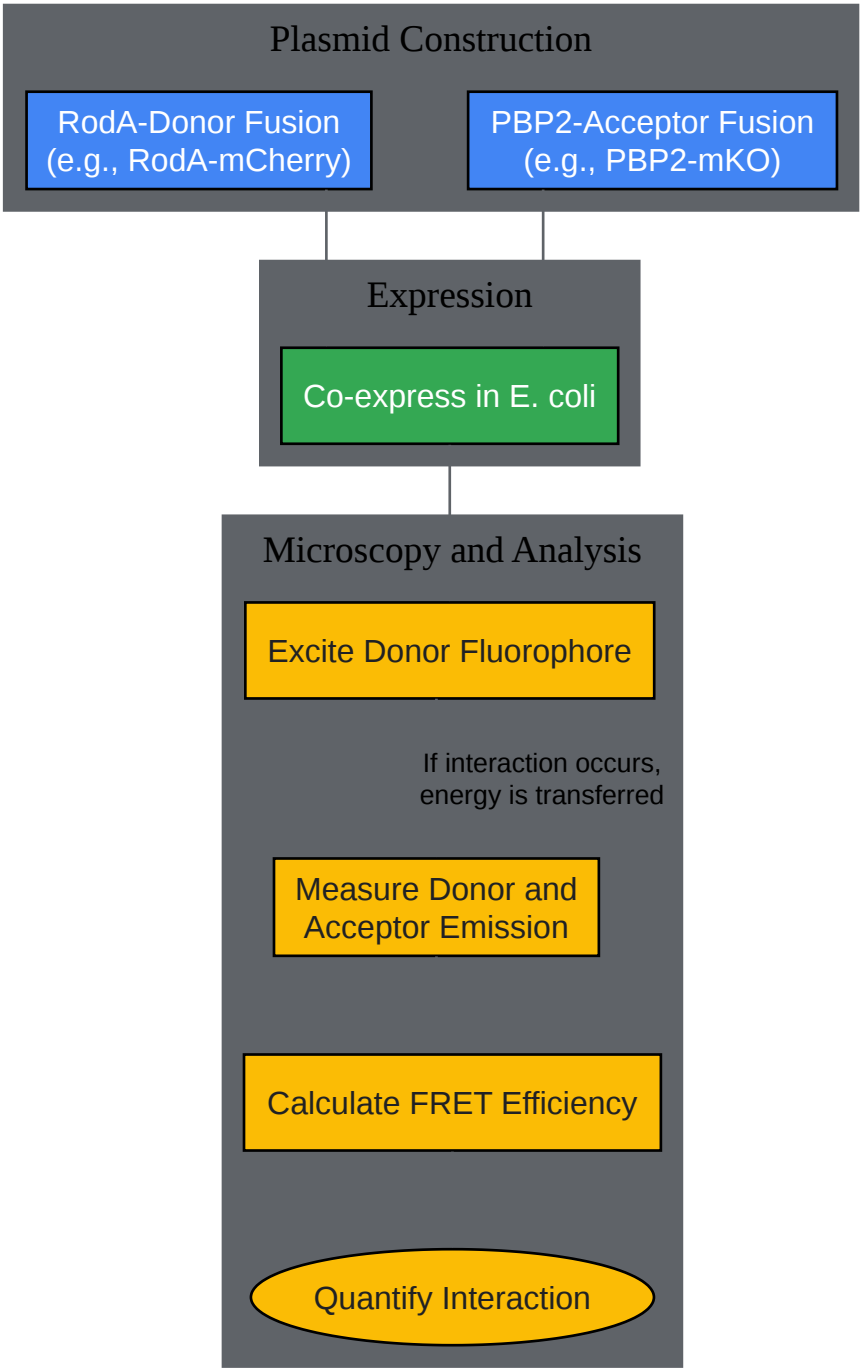

Click to download full resolution via product page

Need Custom Synthesis?

BenchChem offers custom synthesis for rare earth carbides and specific isotopiclabeling.

Email: info@benchchem.com or Request Quote Online.

© 2026 BenchChem. All rights reserved.

References

- 1. researchgate.net [researchgate.net]
- 2. A comparison of two hybrid approaches for detecting protein-protein interactions - PMC [pmc.ncbi.nlm.nih.gov]
- 3. static.igem.org [static.igem.org]
- 4. Interactome - Wikipedia [en.wikipedia.org]
- 5. ptglab.com [ptglab.com]
- 6. proteinguru.com [proteinguru.com]
- 7. researchgate.net [researchgate.net]
- 8. Relationship between the Rod complex and peptidoglycan structure in Escherichia coli - PMC [pmc.ncbi.nlm.nih.gov]

- To cite this document: BenchChem. [A Comparative Guide to In Vivo Validation of the RodA-PBP2 Interaction]. BenchChem, [2026]. [Online PDF]. Available at: [https://www.benchchem.com/product/b1167272/docs#a-comparative-guide-to-in-vivo-validation-of-the-roda-pbp2-interaction]

Disclaimer & Data Validity:

The information provided in this document is for Research Use Only (RUO) and is strictly not intended for diagnostic or therapeutic procedures. While BenchChem strives to provide accurate protocols, we make no warranties, express or implied, regarding the fitness of this product for every specific experimental setup.

Technical Support: The protocols provided are for reference purposes. Unsure if this reagent suits your experiment?

Need Industrial/Bulk Grade? Request Custom Synthesis Quote

BenchChem

Our mission is to be the trusted global source of essential and advanced chemicals, empowering scientists and researchers to drive progress in science and industry.

Contact

Address: 3281 E Guasti Rd

Ontario, CA 91761, United States

Phone: (601) 213-4426

Email: info@benchchem.com

Contact our Ph.D. Support Team for a compatibility check

© 2026 BenchChem. All rights reserved.