Thermodynamic Stability of Cuprous Oxide: A Technical Guide

Author: BenchChem Technical Support Team. **Date**: December 2025

Compound of Interest		
Compound Name:	*cuprite*	
Cat. No.:	*B1143424*	Get Quote

For Researchers, Scientists, and Drug Development Professionals

Introduction

Cuprous oxide (Cu_2O), a p-type semiconductor with a direct bandgap of approximately 2.1 eV, has garnered significant interest across various scientific and technological fields, including catalysis, solar energy conversion, and antimicrobial applications. Its utility in these domains is intrinsically linked to its thermodynamic stability, which dictates its formation, decomposition, and reactivity under different environmental conditions. This technical guide provides an in-depth analysis of the thermodynamic properties of cuprous oxide, offering a comprehensive resource for professionals working with this promising material.

Thermodynamic Parameters of Cuprous Oxide

The stability of a chemical compound is fundamentally described by its thermodynamic state functions: enthalpy (ΔH), entropy (ΔS), and Gibbs free energy (ΔG). For cuprous oxide, these parameters quantify the energy changes associated with its formation from its constituent elements, copper and oxygen.

Standard Enthalpy and Entropy of Formation

The standard enthalpy of formation ($\Delta_f H°$) of Cu_2O is the heat change that occurs when one mole of Cu_2O is formed from solid copper (Cu) and gaseous oxygen (O_2) in their standard

© 2025 BenchChem. All rights reserved.

states (298.15 K and 1 bar). The standard molar entropy (S°) represents the degree of disorder of the compound at the standard state.

Thermodynamic Parameter	Value	Units
Standard Enthalpy of Formation ($\Delta f H°_{298}$)	-170.59 ± 0.08[1]	$kJ \cdot mol^{-1}$
Standard Molar Entropy ($S°_{298}$)	93.14	$J \cdot mol^{-1} \cdot K^{-1}$

Gibbs Free Energy of Formation

The spontaneity of the formation of cuprous oxide is determined by the change in Gibbs free energy ($\Delta f G°$). A negative value indicates a spontaneous reaction. The Gibbs free energy of formation for Cu_2O has been determined over a range of temperatures using electrochemical methods.[1]

The temperature dependence of the standard Gibbs free energy of formation for the reaction $2Cu(s) + ½O_2(g) \rightarrow Cu_2O(s)$ can be expressed by the following equation:

$$\Delta f G°(T) = \Delta f H° - T\Delta S°$$

A comprehensive summary of the temperature-dependent thermodynamic data for the formation of cuprous oxide is presented in the table below.

© 2025 BenchChem. All rights reserved.

Temperature (K)	ΔfH° (kJ·mol⁻¹)	ΔS° (J·mol⁻¹·K⁻¹)	ΔfG° (kJ·mol⁻¹)
298.15	-170.59	-78.1	-147.28
400	-170.8	-78.6	-139.36
500	-170.9	-78.9	-131.45
600	-170.8	-78.8	-123.52
700	-170.5	-78.5	-115.55
800	-170.2	-78.1	-107.72
900	-169.8	-77.7	-99.87
1000	-169.3	-77.2	-92.1
1100	-168.8	-76.8	-84.32
1200	-168.3	-76.3	-76.74
1300	-167.7	-75.9	-69.03

Factors Influencing the Stability of Cuprous Oxide

The thermodynamic stability of cuprous oxide is not absolute and is significantly influenced by external factors such as temperature and the partial pressure of oxygen.

Temperature and Oxygen Partial Pressure: The Copper-Oxygen Phase Diagram

The relationship between temperature, oxygen partial pressure, and the stable phases of the copper-oxygen system is best visualized through the Cu-O phase diagram. This diagram delineates the conditions under which metallic copper (Cu), cuprous oxide (Cu_2O), and cupric oxide (CuO) are the thermodynamically favored species.

As shown in the phase diagram, at a given oxygen partial pressure, increasing the temperature can lead to the decomposition of CuO to Cu_2O, and further to metallic copper. Conversely, at a constant temperature, increasing the oxygen partial pressure favors the formation of the more oxidized species (CuO). For instance, cupric oxide (CuO) thermally decomposes to cuprous

© 2025 BenchChem. All rights reserved.

oxide (Cu_2O) and oxygen at elevated temperatures.[2] The equilibrium oxygen pressure for this decomposition is dependent on the temperature; at 1100 K (827 °C), the equilibrium oxygen pressure is 0.002 atm, while at 1200 K, it increases to 0.025 atm.[2]

The oxidation of Cu_2O to CuO is also dependent on temperature and oxygen partial pressure. Isothermal thermogravimetric analysis has shown that increasing the oxygen partial pressure increases the rate of oxidation of Cu_2O to CuO.[3][4]

Aqueous Environments: The Pourbaix Diagram

In aqueous solutions, the stability of copper and its oxides is a function of both the electrode potential (a measure of the oxidizing or reducing power of the solution) and the pH. This relationship is graphically represented by a Pourbaix diagram.

The Pourbaix diagram for the copper-water system illustrates the regions of stability for Cu, Cu_2O, and CuO, as well as the soluble copper ions (Cu^+ and Cu^{2+}). The lines on the diagram represent the equilibria between different species. Horizontal lines denote redox reactions that are independent of pH, vertical lines represent acid-base reactions independent of potential, and sloping lines indicate reactions that depend on both potential and pH.[5] Understanding the Pourbaix diagram is crucial for applications involving Cu_2O in aqueous environments, such as in photocatalysis or as an antimicrobial agent, as it predicts the conditions under which the desired phase is stable.

Experimental Determination of Thermodynamic Properties

The thermodynamic data presented in this guide are derived from rigorous experimental measurements. The following sections detail the methodologies for two key experimental techniques used to determine the enthalpy and Gibbs free energy of formation of cuprous oxide.

Synthesis of Cuprous Oxide for Experimental Studies

A common method for synthesizing Cu_2O nanoparticles for experimental evaluation is through the chemical reduction of a copper salt.[6][7][8][9]

Protocol for the Synthesis of Cuprous Oxide Nanoparticles:

© 2025 BenchChem. All rights reserved.

- Preparation of Precursor Solution: A solution of copper sulfate pentahydrate ($CuSO_4 \cdot 5H_2O$) is prepared in deionized water.
- Addition of a Capping Agent: A capping agent, such as polyethylene glycol (PEG), is added to the solution to control the size and prevent agglomeration of the nanoparticles.[8]
- pH Adjustment: The pH of the solution is adjusted by the dropwise addition of a sodium hydroxide (NaOH) solution.[6][9]
- Reduction: A reducing agent, such as ascorbic acid or sodium borohydride ($NaBH_4$), is added to the solution to reduce the Cu^{2+} ions to Cu^{+}, leading to the precipitation of Cu_2O nanoparticles.[6][8]
- Purification: The resulting precipitate is collected by centrifugation, washed multiple times with deionized water and ethanol to remove any unreacted reagents and byproducts, and finally dried under vacuum.

© 2025 BenchChem. All rights reserved.

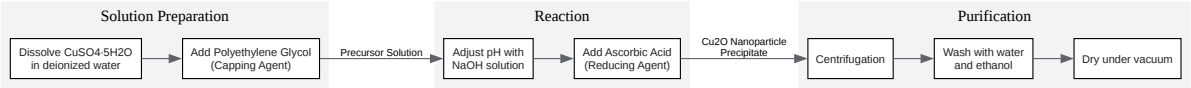

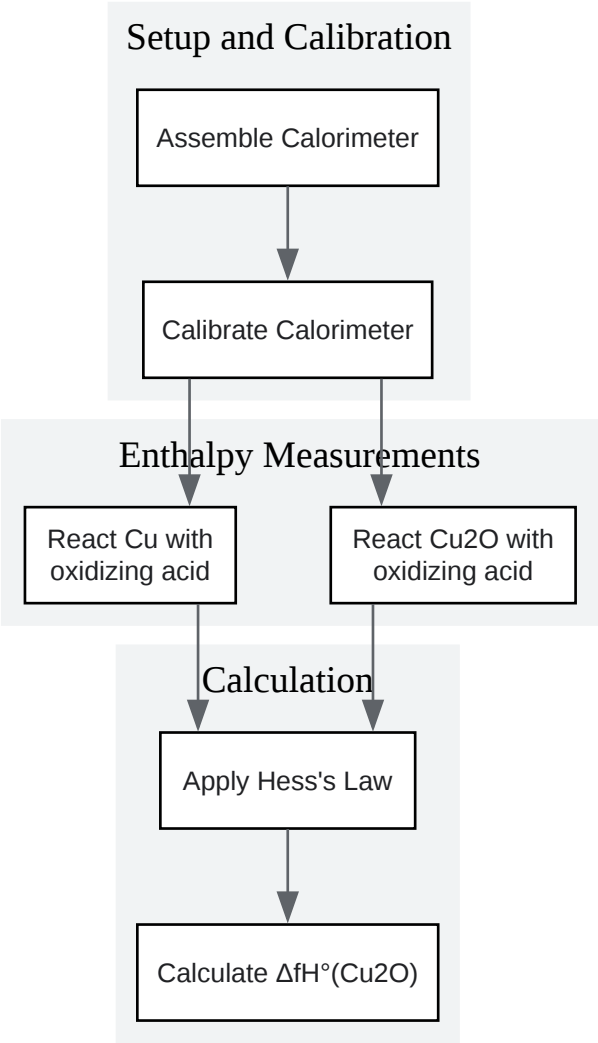

© 2025 BenchChem. All rights reserved.

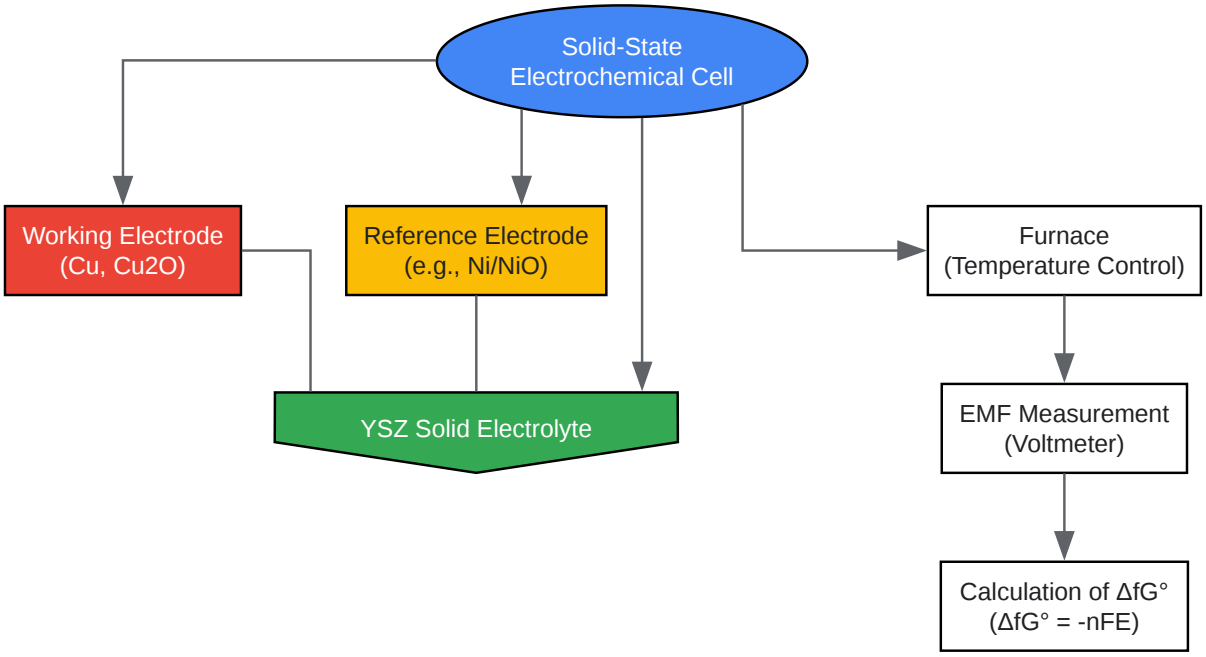

Click to download full resolution via product page

Need Custom Synthesis?

BenchChem offers custom synthesis for rare earth carbides and specific isotopiclabeling.

Email: info@benchchem.com or Request Quote Online.

References

- 1. dspace-test.anu.edu.au [dspace-test.anu.edu.au]
- 2. US4080430A - Decomposition of cupric oxide using a reducing scavenger - Google Patents [patents.google.com]
- 3. mdpi.com [mdpi.com]
- 4. researchgate.net [researchgate.net]
- 5. chem.libretexts.org [chem.libretexts.org]
- 6. Cu2O nanoparticles synthesized by green and chemical routes, and evaluation of their antibacterial and antifungal effect on functionalized textiles - PMC [pmc.ncbi.nlm.nih.gov]
- 7. essuir.sumdu.edu.ua [essuir.sumdu.edu.ua]

© 2025 BenchChem. All rights reserved.

- 8. Cuprous Oxide Nanoparticles: Synthesis, Characterization, and Their Application for Enhancing the Humidity-Sensing Properties of Poly(dioctylfluorene) [mdpi.com]
- 9. sciepub.com [sciepub.com]

- To cite this document: BenchChem. [Thermodynamic Stability of Cuprous Oxide: A Technical Guide]. BenchChem, [2025]. [Online PDF]. Available at: [https://www.benchchem.com/product/b1143424#thermodynamic-stability-of-cuprous-oxide]

Disclaimer & Data Validity:

The information provided in this document is for Research Use Only (RUO) and is strictly not intended for diagnostic or therapeutic procedures. While BenchChem strives to provide accurate protocols, we make no warranties, express or implied, regarding the fitness of this product for every specific experimental setup.

Technical Support: The protocols provided are for reference purposes. Unsure if this reagent suits your experiment? [Contact our Ph.D. Support Team for a compatibility check]

Need Industrial/Bulk Grade? Request Custom Synthesis Quote

BenchChem

Our mission is to be the trusted global source of essential and advanced chemicals, empowering scientists and researchers to drive progress in science and industry.

Contact

Address: 3281 E Guasti Rd

Ontario, CA 91761, United States

Phone: (601) 213-4426

Email: info@benchchem.com

© 2025 BenchChem. All rights reserved.