Technical Support Center: Minimizing Homocoupling of 2-Fluorophenylzinc Iodide

Author: BenchChem Technical Support Team. **Date**: May 2026

Compound of Interest

Compound Name:	*2-Fluorophenylzinc iodide*
CAS No.:	*186000-41-9*
Cat. No.:	*B1143133*

Get Quote

Welcome to the technical support center for organozinc chemistry. This guide is designed for researchers, scientists, and professionals in drug development who are utilizing **2-fluorophenylzinc iodide** in their synthetic endeavors. Homocoupling of organozinc reagents is a common side reaction that can significantly impact yield and purity. This resource provides in-depth troubleshooting advice and answers to frequently asked questions to help you minimize this unwanted side reaction and optimize your cross-coupling protocols.

Troubleshooting Guide: Diagnosis and Mitigation of Homocoupling

This section addresses specific issues you may encounter during your experiments, providing probable causes and actionable solutions.

Problem 1: Significant formation of 2,2'-difluorobiphenyl is observed.

Probable Cause 1: Presence of Oxidants (e.g., Oxygen)

© 2026 BenchChem. All rights reserved.

Homocoupling can be initiated by the presence of atmospheric oxygen. The mechanism often involves the oxidation of the palladium(0) catalyst to a more reactive palladium(II) species, which can facilitate the undesired coupling of two organozinc molecules.

Solution:

- Rigorous Degassing: It is crucial to thoroughly degas all solvents and reagents. A common and effective method is to sparge the solvent with an inert gas (argon or nitrogen) for at least 30 minutes.[1] For reactions sensitive to trace oxygen, employing the freeze-pump-thaw technique (three cycles) is recommended.

- Inert Atmosphere: Maintain a positive pressure of an inert gas (argon or nitrogen) throughout the entire reaction setup, from reagent preparation to quenching. This can be achieved using a balloon or a bubbler system.

Probable Cause 2: Suboptimal Catalyst or Ligand Choice

The choice of palladium catalyst and its associated ligands plays a pivotal role in dictating the relative rates of the desired cross-coupling and the undesired homocoupling. Some catalyst systems are inherently more prone to promoting homocoupling.

Solution:

- Ligand Selection: Employ bulky, electron-rich phosphine ligands. These ligands can stabilize the palladium(0) state and sterically hinder the formation of the diarylpalladium(II) intermediate that precedes homocoupling.[2]

- Catalyst Precursors: Consider using pre-formed, well-defined palladium(0) catalysts, such as $Pd(PPh_3)_4$ or $Pd_2(dba)_3$, to avoid in situ reduction steps that can be sensitive to reaction conditions.

Probable Cause 3: Inefficient Transmetalation

If the transmetalation of the 2-fluorophenyl group from zinc to the palladium center is slow relative to other processes, it can lead to a buildup of reactive intermediates that may decompose via homocoupling.

© 2026 BenchChem. All rights reserved.

Solution:

- Solvent Effects: The choice of solvent can significantly influence the rate of transmetalation. Polar aprotic solvents like THF or DMF are generally preferred for Negishi couplings as they can help to solubilize the organozinc reagent and facilitate the transmetalation step.[3]
- Additives: The presence of lithium salts (e.g., LiCl) can be beneficial. These salts can break up organozinc aggregates, leading to more reactive monomeric species that undergo faster transmetalation.[3]

Problem 2: Inconsistent results and variable yields of the desired cross-coupled product.

Probable Cause 1: Batch-to-Batch Variation in Organozinc Reagent Quality

The quality and concentration of the **2-fluorophenylzinc iodide** solution can vary, leading to inconsistent reaction outcomes. The presence of unreacted zinc or other impurities can catalyze side reactions.

Solution:

- Titration of Organozinc Reagent: Before use, it is highly recommended to titrate the organozinc reagent to accurately determine its concentration. This ensures consistent stoichiometry in your reactions.
- Fresh Preparation: If possible, prepare the **2-fluorophenylzinc iodide** in situ or use a freshly opened commercial solution. Over time, organozinc reagents can degrade, especially if not stored under strictly anhydrous and inert conditions.

Probable Cause 2: Catalyst Decomposition

The active palladium(0) catalyst can be sensitive and may decompose over the course of the reaction, leading to lower yields and the formation of byproducts.

Solution:

© 2026 BenchChem. All rights reserved.

- Catalyst Loading: While minimizing catalyst loading is often desirable for cost and environmental reasons, using a slightly higher catalyst loading (e.g., 1-2 mol%) can sometimes compensate for slow catalyst decomposition.

- Reaction Temperature: Running the reaction at the lowest effective temperature can help to prolong the catalyst's lifetime. High temperatures can accelerate catalyst decomposition pathways.

Frequently Asked Questions (FAQs)

Q1: What is the primary mechanism of homocoupling in Negishi reactions?

A1: One of the key proposed mechanisms for homocoupling in Negishi reactions involves a second transmetalation event. After the initial transmetalation to form an Ar-Pd-Ar' intermediate, a subsequent transmetalation with another molecule of the organozinc reagent can occur, leading to an Ar'-Pd-Ar' species. This diarylpalladium complex can then undergo reductive elimination to yield the homocoupled product (Ar'-Ar') and regenerate the Pd(0) catalyst.[4]

Catalytic Cycle and Homocoupling Pathway

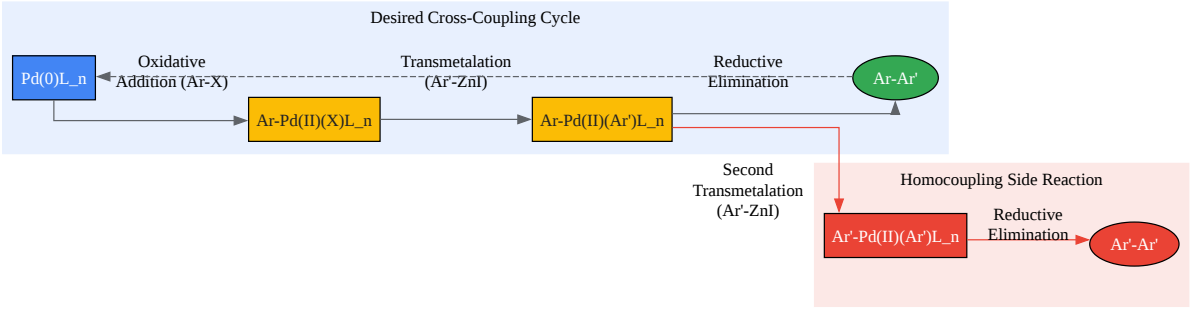

Click to download full resolution via product page

Caption: Catalytic cycle of Negishi cross-coupling and the competing homocoupling pathway.

Q2: Can the order of addition of reagents influence the extent of homocoupling?

A2: Yes, the order of addition can be critical. It is generally advisable to add the organozinc reagent slowly to the mixture of the aryl halide, catalyst, and ligand. This helps to maintain a low concentration of the organozinc reagent in the reaction mixture, which can disfavor the second transmetalation step that leads to homocoupling.

Q3: Are there any alternative coupling partners to **2-fluorophenylzinc iodide** that might be less prone to homocoupling?

A3: While organozinc reagents are highly effective, other organometallic reagents can be considered. For instance, organoboron reagents (in Suzuki-Miyaura coupling) are often less prone to homocoupling under standard conditions. However, the choice of coupling partner will depend on the specific requirements of your synthesis, including functional group tolerance and reactivity.

Q4: How can I effectively remove the homocoupled byproduct during purification?

A4: The separation of the desired cross-coupled product from the homocoupled byproduct can sometimes be challenging due to similar polarities. Standard chromatographic techniques (e.g., column chromatography) are typically employed. Careful selection of the solvent system and the use of high-resolution columns can improve separation. In some cases, recrystallization may also be an effective purification method.

Experimental Protocol: General Procedure for Minimizing Homocoupling in a Negishi Coupling

This protocol provides a starting point for optimizing your reaction to minimize the formation of 2,2'-difluorobiphenyl.

Materials:

- Aryl halide (1.0 mmol)

© 2026 BenchChem. All rights reserved.

- **2-Fluorophenylzinc iodide** solution (e.g., 0.5 M in THF, carefully titrated) (1.1 mmol, 1.1 equiv)
- Palladium catalyst (e.g., $Pd(PPh_3)_4$, 0.02 mmol, 2 mol%)
- Anhydrous THF (degassed)
- Anhydrous LiCl (if used as an additive)

Procedure:

- Inert Atmosphere Setup: Assemble a flame-dried round-bottom flask equipped with a magnetic stir bar and a condenser under a positive pressure of argon or nitrogen.
- Reagent Addition: To the flask, add the aryl halide, the palladium catalyst, and any solid additives like LiCl.
- Solvent Addition: Add the degassed anhydrous THF to the flask.
- Slow Addition of Organozinc Reagent: Begin stirring the mixture and slowly add the **2-fluorophenylzinc iodide** solution dropwise via a syringe pump over a period of 1-2 hours.
- Reaction Monitoring: Monitor the progress of the reaction by TLC or GC-MS.
- Quenching: Once the reaction is complete, cool the mixture to 0 °C and quench by the slow addition of a saturated aqueous solution of ammonium chloride.
- Workup and Purification: Extract the aqueous layer with an appropriate organic solvent (e.g., ethyl acetate). Combine the organic layers, dry over anhydrous sodium sulfate, filter, and concentrate under reduced pressure. Purify the crude product by column chromatography.

Troubleshooting Workflow

© 2026 BenchChem. All rights reserved.

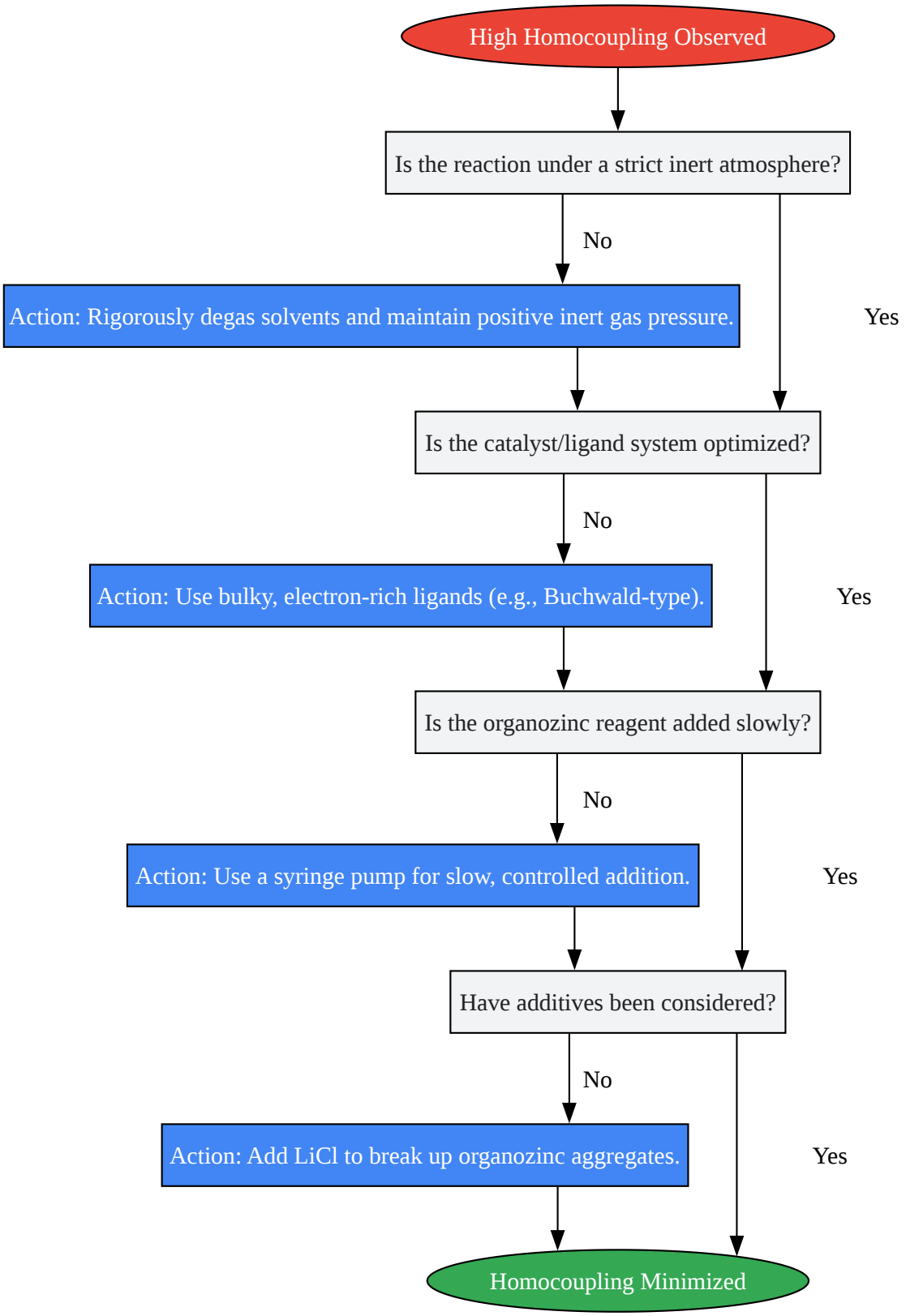

Click to download full resolution via product page

Caption: A logical workflow for troubleshooting and minimizing homocoupling side reactions.

© 2026 BenchChem. All rights reserved.

References

- Generation and Cross-Coupling of Organozinc Reagents in Flow. ResearchGate. Available at: [Link]
- Negishi coupling. Wikipedia. Available at: [Link]
- Organozinc compounds|Reformatsky reaction mechanism|Negishi coupling reaction mechanism|J Chemistry. YouTube. Available at: [Link]
- Mechanisms of Organozinc Reagent Formation Determined Through a Combined Single-Particle-Fluorescence-Microscopy and NMR-Spectroscopy Approach. eScholarship.org. Available at: [Link]
- Suppression of a Palladium-Mediated Homocoupling in a Suzuki Cross-Coupling Reaction. Development of an Impurity Control Strategy Supporting Synthesis of LY451395. ResearchGate. Available at: [Link]
- CROSS-COUPLING reactions - everything YOU need to know! (Full Introduction + overview). YouTube. Available at: [Link]
- Negishi Coupling. Organic Chemistry Portal. Available at: [Link]
- The Negishi Cross-Coupling Reaction. Denmark Group, UIUC. Available at: [Link]
- Negishi Cross-Coupling/Problem Solved/ CSIR 2016/ChemOrgChem. YouTube. Available at: [Link]
- Organozinc Chemistry Enabled by Micellar Catalysis. Palladium-Catalyzed Cross-Couplings between Alkyl and Aryl Bromides in Water at Room Temperature. PMC - NIH. Available at: [Link]
- Recent Advances in Cross-Couplings of Functionalized Organozinc Reagents. ResearchGate. Available at: [Link]
- Negishi Coupling Reaction Practice Problems. ClutchPrep. Available at: [Link]

© 2026 BenchChem. All rights reserved.

- Cross-Coupling and Related Reactions: Connecting Past Success to the Development of New Reactions for the Future. PMC. Available at: [Link]
- 21.01.3.3: Negishi Coupling. Chemistry LibreTexts. Available at: [Link]

Need Custom Synthesis?

BenchChem offers custom synthesis for rare earth carbides and specific isotopiclabeling.

Email: info@benchchem.com or Request Quote Online.

Sources

- 1. researchgate.net [researchgate.net]
- 2. Cross-Coupling and Related Reactions: Connecting Past Success to the Development of New Reactions for the Future - PMC [pmc.ncbi.nlm.nih.gov]
- 3. denmarkgroup.web.illinois.edu [denmarkgroup.web.illinois.edu]
- 4. Negishi coupling - Wikipedia [en.wikipedia.org]
- To cite this document: BenchChem. [Technical Support Center: Minimizing Homocoupling of 2-Fluorophenylzinc Iodide]. BenchChem, [2026]. [Online PDF]. Available at: [https://www.benchchem.com/product/b1143133/docs#technical-support-center-minimizing-homocoupling-of-2-fluorophenylzinc-iodide]

Disclaimer & Data Validity:

The information provided in this document is for Research Use Only (RUO) and is strictly not intended for diagnostic or therapeutic procedures. While BenchChem strives to provide accurate protocols, we make no warranties, express or implied, regarding the fitness of this product for every specific experimental setup.

Technical Support: The protocols provided are for reference purposes. Unsure if this reagent suits your experiment?

Need Industrial/Bulk Grade? Request Custom Synthesis Quote

© 2026 BenchChem. All rights reserved.

BenchChem

Our mission is to be the trusted global source of essential and advanced chemicals, empowering scientists and researchers to drive progress in science and industry.

Contact

Address: 3281 E Guasti Rd

Ontario, CA 91761, United States

Phone: (601) 213-4426

Email: info@benchchem.com

Contact our Ph.D. Support Team for a compatibility check

© 2026 BenchChem. All rights reserved.