Technical Guide: UGT-Mediated Formation of trans-3'-Hydroxycotinine Glucuronide

Author: BenchChem Technical Support Team. **Date**: May 2026

Compound of Interest

Compound Name:	*trans-3'-Hydroxy Cotinine N-β-D-Glucuronide*
CAS No.:	*146275-18-5*
Cat. No.:	*B1139854*

Get Quote

Executive Summary

trans-3'-Hydroxycotinine (3HC) is the primary metabolite of cotinine and a critical biomarker for CYP2A6 activity (via the Nicotine Metabolite Ratio, NMR).[1][2] While CYP2A6 governs the formation of 3HC, its elimination is facilitated by Phase II conjugation. The formation of 3HC-glucuronide (3HC-Gluc) is catalyzed by specific UDP-glucuronosyltransferase (UGT) enzymes.[3][4]

Key Technical Takeaways:

- Primary Catalyst:UGT2B17 is the dominant enzyme for O-glucuronidation (the major urinary metabolite).
- Secondary Catalysts: UGT2B10 drives N-glucuronidation (minor pathway), while UGT2B7 and UGT1A9 show minor O-glucuronidation activity.
- Clinical Relevance: While UGT polymorphisms (e.g., UGT2B17 deletion) significantly alter urinary 3HC-Gluc levels, they do not confound the validity of the plasma NMR as a CYP2A6

© 2026 BenchChem. All rights reserved.

marker, establishing NMR as a robust phenotypic index.

Part 1: Metabolic Pathway & Enzymology

The Metabolic Cascade

Nicotine metabolism occurs primarily in the liver. The pathway proceeds from Nicotine

Cotinine

3HC, followed by Phase II conjugation.

- 3HC-O-Glucuronide: The hydroxyl group at the 3' position is conjugated.[3] This is the predominant moiety found in human urine.
- 3HC-N-Glucuronide: Conjugation occurs at the pyridine nitrogen.[3][5][6] This is a minor pathway in vivo but detectable in vitro.

Enzyme Kinetics and Specificity

Understanding the specific UGT isoforms is crucial for interpreting in vitro-in vivo extrapolation (IVIVE) data.

© 2026 BenchChem. All rights reserved.

Enzyme	Reaction Type	(mM)	Relative Contribution	Notes
UGT2B17	O-Glucuronidation	~8.3	Major	High affinity.[4] Polymorphic deletion (*2*/2) leads to negligible activity.
UGT2B10	N-Glucuronidation	~13.0	Minor	High affinity for N-glucuronidation but product is minor in urine.
UGT2B7	O-Glucuronidation	~31.0	Low	Low affinity; significant only at high substrate concentrations.
UGT1A9	O-Glucuronidation	~35.0	Low	Low affinity.
UGT1A4	N-Glucuronidation	~57.0	Negligible	significantly lower affinity than UGT2B10. [4]

Mechanistic Insight: The dominance of UGT2B17 explains the high inter-individual variability in urinary 3HC-Gluc levels, as the UGT2B17 gene deletion is common (prevalence varies by ethnicity).

Pathway Visualization

© 2026 BenchChem. All rights reserved.

The following diagram illustrates the sequential oxidation and subsequent glucuronidation pathways, highlighting the enzyme-specific roles.

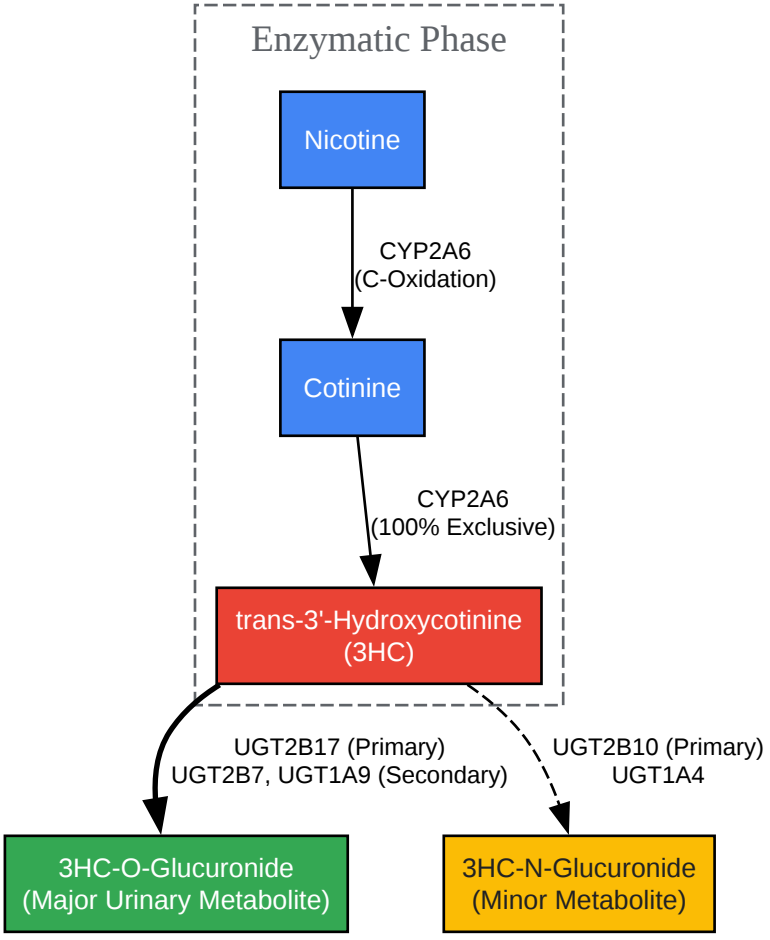

Click to download full resolution via product page

Caption: Metabolic trajectory of Nicotine to 3HC-Glucuronides. Solid lines indicate major pathways; dashed lines indicate minor pathways.

Part 2: Experimental Protocols

Standardized In Vitro Glucuronidation Assay

This protocol is designed to phenotype UGT activity in Human Liver Microsomes (HLM) or recombinant enzymes (Supersomes™).

Reagents:

© 2026 BenchChem. All rights reserved.

- Buffer: 50 mM Tris-HCl (pH 7.4 for O-gluc; pH 8.5 can optimize N-gluc detection).
- Cofactor: Uridine 5'-diphosphoglucuronic acid (UDPGA), 2-5 mM final concentration.
- Pore-forming agent: Alamethicin (50 µg/mg protein) – Critical for maximizing luminal UGT access.
- Magnesium: 10 mM $MgCl_2$.
- Substrate:trans-3'-Hydroxycotinine (purity >98%).

Workflow:

- Pre-incubation: Mix HLM (0.5 mg/mL final), Buffer, $MgCl_2$, and Alamethicin on ice for 15 min to permeabilize membranes.
- Substrate Addition: Add 3HC (concentration range 0.1 – 50 mM for kinetic determination). Pre-warm to 37°C for 5 min.
- Initiation: Start reaction by adding UDPGA.
- Incubation: Incubate at 37°C with shaking.
  - Time: 30–60 minutes (Must be within linear range; validate linearity for your specific lot).
- Termination: Add ice-cold Acetonitrile or Methanol (1:1 v/v) containing Internal Standard (e.g., 3HC-d3).
- Clarification: Centrifuge at 15,000 x g for 10 min at 4°C. Collect supernatant for LC-MS/MS.

LC-MS/MS Analytical Method

Direct quantification of the glucuronide is superior to enzymatic hydrolysis (beta-glucuronidase) methods, which can be incomplete or introduce variability.

Instrument Parameters (Example for Triple Quadrupole):

- Ionization: ESI Positive Mode.

© 2026 BenchChem. All rights reserved.

- Column: C18 Reverse Phase (e.g., Acquity HSS T3), to retain polar glucuronides.
- Mobile Phase:
  - A: 0.1% Formic Acid in Water.
  - B: 0.1% Formic Acid in Acetonitrile.[7]

MRM Transitions:

Analyte	Precursor Ion ( )	Product Ion ( )	Collision Energy (eV)
3HC-Glucuronide	369.1	193.1	~25
3HC (Parent)	193.1	80.1 / 134.1	~20
3HC-d3 (IS)	196.1	80.1	~20

Note: The transition 369 > 193 represents the loss of the glucuronic acid moiety (176 Da).

Experimental Workflow Diagram

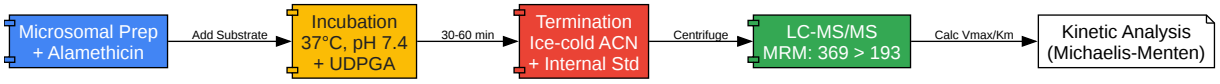

Click to download full resolution via product page

Caption: Step-by-step workflow for in vitro characterization of 3HC glucuronidation.

Part 3: Scientific Integrity & Implications

Genetic Polymorphisms & Data Interpretation

When analyzing clinical data, researchers must account for the UGT2B17 copy number variation (CNV).

© 2026 BenchChem. All rights reserved.

- **Wild Type (1/1): High urinary 3HC-Gluc levels.
- **Deletion (2/2): Significantly reduced or absent 3HC-O-Gluc formation.[4]
- Impact on NMR: Crucially, studies indicate that while UGT genotypes alter the urinary ratio of Glucuronide/Free metabolite, they do not significantly alter the plasma Nicotine Metabolite Ratio (3HC/Cotinine). This preserves the utility of NMR as a CYP2A6 biomarker regardless of UGT status.

Quality Control & Self-Validation

To ensure trustworthiness in your assay:

- Linearity Check: Always run a time-course (0, 15, 30, 60 min) and protein titration (0.1, 0.25, 0.5 mg/mL) during assay development to ensure initial rate conditions.
- Mass Balance: If using radiolabeled 3HC, ensure the sum of Parent + Glucuronide accounts for >90% of total radioactivity.
- Negative Controls: Incubations without UDPGA should yield zero glucuronide peak.

References

- Chen, G., et al. (2012).[8] Glucuronidation of trans-3′-hydroxycotinine by UGT2B17 and UGT2B10. Pharmacogenetics and Genomics.
- Kaivosaari, S., et al. (2007). N-glucuronidation of nicotine and cotinine by human liver microsomes and heterologously expressed UDP-glucuronosyltransferases. Drug Metabolism and Disposition.
- Zhu, A.Z., et al. (2013). Variation in trans-3'-hydroxycotinine glucuronidation does not alter the nicotine metabolite ratio or nicotine intake.[1][8] PLoS ONE.
- Jacob, P., et al. (2011).[9] Determination of Cotinine and trans-3'-hydroxycotinine in human plasma by LC-MS/MS. Journal of Chromatography B.

© 2026 BenchChem. All rights reserved.

Need Custom Synthesis?

BenchChem offers custom synthesis for rare earth carbides and specific isotopiclabeling.

Email: info@benchchem.com or Request Quote Online.

Sources

- 1. boris-portal.unibe.ch [boris-portal.unibe.ch]
- 2. Trans-3'-hydroxycotinine - BEVITAL AS [bevital.no]
- 3. Glucuronidation of trans-3′-hydroxycotinine by UGT2B17 and UGT2B10 - PMC [pmc.ncbi.nlm.nih.gov]
- 4. Amanote [app.amanote.com]
- 5. N-glucuronidation of trans-3'-hydroxycotinine by human liver microsomes - PubMed [pubmed.ncbi.nlm.nih.gov]
- 6. aacrjournals.org [aacrjournals.org]
- 7. Quantification of Nicotine, Cotinine, trans-3’-Hydroxycotinine, Nornicotine and Norcotinine in Human Meconium by Liquid Chromatography Tandem Mass Spectrometry - PMC [pmc.ncbi.nlm.nih.gov]
- 8. (PDF) Glucuronidation of Trans-3′-Hydroxycotinine by [research.amanote.com]
- 9. d-nb.info [d-nb.info]

- To cite this document: BenchChem. [Technical Guide: UGT-Mediated Formation of trans-3'-Hydroxycotinine Glucuronide]. BenchChem, [2026]. [Online PDF]. Available at: [https://www.benchchem.com/product/b1139854/docs#technical-guide-ugt-mediated-formation-of-trans-3-hydroxycotinine-glucuronide]

Disclaimer & Data Validity:

The information provided in this document is for Research Use Only (RUO) and is strictly not intended for diagnostic or therapeutic procedures. While BenchChem strives to provide accurate protocols, we make no warranties, express or implied, regarding the fitness of this product for every specific experimental setup.

Technical Support: The protocols provided are for reference purposes. Unsure if this reagent suits your experiment?

Need Industrial/Bulk Grade? Request Custom Synthesis Quote

BenchChem

Our mission is to be the trusted global source of essential and advanced chemicals, empowering scientists and researchers to drive progress in science and industry.

Contact

Address: 3281 E Guasti Rd

Ontario, CA 91761, United States

Phone: (601) 213-4426

Email: info@benchchem.com

Contact our Ph.D. Support Team for a compatibility check

© 2026 BenchChem. All rights reserved.