Application Notes and Protocols for C-N Cross-Coupling with Pyrimidine Substrates

Author: BenchChem Technical Support Team. **Date**: May 2026

Compound of Interest

Compound Name:	*5-Amino-2-bromopyrimidine*
CAS No.:	*56621-91-1*
Cat. No.:	*B112789*

Get Quote

For Researchers, Scientists, and Drug Development Professionals

This document provides detailed experimental procedures for the palladium-catalyzed C-N cross-coupling of amines with pyrimidine substrates, a crucial reaction in the synthesis of pharmacologically active compounds. The protocols outlined below are based on the principles of the Buchwald-Hartwig amination, a powerful method for the formation of carbon-nitrogen bonds.[1][2][3]

Introduction

The pyrimidine scaffold is a fundamental heterocyclic motif present in a vast array of biologically active molecules, including numerous approved drugs. The formation of C-N bonds at various positions on the pyrimidine ring is a key step in the synthesis and functionalization of these important compounds. Palladium-catalyzed cross-coupling reactions, particularly the Buchwald-Hartwig amination, have become indispensable tools for this purpose due to their broad substrate scope and functional group tolerance.[4][5][6] This methodology enables the coupling of pyrimidine halides or pseudohalides with a wide range of primary and secondary amines.

© 2026 BenchChem. All rights reserved.

Experimental Protocols

The following protocols provide a general framework for the C-N cross-coupling of pyrimidine substrates. Optimization of reaction parameters such as catalyst, ligand, base, solvent, and temperature may be necessary for specific substrate combinations to achieve optimal yields.

Protocol 1: General Procedure for Buchwald-Hartwig Amination of Halogenated Pyrimidines

This protocol is adapted from established procedures for the palladium-catalyzed amination of aryl halides and is suitable for a range of pyrimidine substrates.[1][4]

Materials:

- Halogenated pyrimidine (e.g., 2-chloropyrimidine, 4-bromopyrimidine) (1.0 equiv)
- Amine (primary or secondary) (1.1 - 1.2 equiv)
- Palladium catalyst (e.g., $Pd_2(dba)_3$, $Pd(OAc)_2$) (1-5 mol%)
- Phosphine ligand (e.g., Xantphos, RuPhos, BrettPhos) (2-10 mol%)[4][7]
- Base (e.g., NaOt-Bu, K_3PO_4, Cs_2CO_3) (1.4 - 2.5 equiv)[1][8]
- Anhydrous solvent (e.g., toluene, dioxane, THF)[1][4][8]
- Inert gas (Argon or Nitrogen)
- Standard glassware for inert atmosphere reactions

Procedure:

- Reaction Setup: To a dry Schlenk flask or reaction vial under an inert atmosphere, add the palladium catalyst, phosphine ligand, and base.
- Addition of Reactants: Add the halogenated pyrimidine and the amine to the reaction vessel.

© 2026 BenchChem. All rights reserved.

- Solvent Addition: Add the anhydrous solvent via syringe. The typical concentration is 0.1 M with respect to the pyrimidine substrate.[1]
- Reaction Conditions: Seal the vessel and heat the reaction mixture with stirring in a preheated oil bath to the desired temperature (typically 80-120 °C). Monitor the reaction progress by TLC or LC-MS.[1]
- Work-up: Upon completion, cool the reaction mixture to room temperature. Dilute with a suitable organic solvent (e.g., ethyl acetate) and wash with water and brine.
- Purification: Dry the organic layer over anhydrous sodium sulfate, filter, and concentrate under reduced pressure. Purify the crude product by flash column chromatography on silica gel.[1]

Protocol 2: Microwave-Assisted Buchwald-Hartwig Amination

Microwave irradiation can significantly reduce reaction times and in some cases improve yields.[9][10]

Materials:

- Same as Protocol 1
- Microwave reactor vials

Procedure:

- Reaction Setup: In a microwave reactor vial, combine the palladium catalyst (e.g., $Pd_2(dba)_3$, 5 mol%), phosphine ligand (e.g., XPhos, 7-10 mol%), base (e.g., t-BuONa, 2.2-2.5 equiv), halogenated pyrimidine (1.0 equiv), and amine (2.1-2.2 equiv).[9]
- Solvent Addition: Add anhydrous toluene.[9]
- Microwave Irradiation: Seal the vial and place it in the microwave reactor. Irradiate the mixture at a set temperature (e.g., 130-150 °C) for a specified time (e.g., 10-30 minutes).[9]

© 2026 BenchChem. All rights reserved.

- Work-up and Purification: After cooling, work-up and purify the product as described in Protocol 1.

Data Presentation

The following tables summarize representative quantitative data for the C-N cross-coupling of various pyrimidine substrates.

Table 1: Palladium-Catalyzed Amination of 4-(Pyridin-3-yl)pyrimidin-2-amines[4]

© 2026 BenchChem. All rights reserved.

Entry	Aryl Bromide	Amine	Catalyst/Ligand	Base	Solvent	Temp (°C)	Time (h)	Yield (%)
1	4-Bromoanisole	2-Amino-4-(pyridin-3-yl)pyrimidine	$Pd_2(dba)_3$ / dppp	NaOt-Bu	Toluene	Reflux	24	Low
2	4-Bromoanisole	2-Amino-4-(pyridin-3-yl)pyrimidine	$PdCl_2(PPh_3)_2$ / Xantphos	NaOt-Bu	Toluene	Reflux	24	82
3	1-Bromo-4-(trifluoromethyl)benzene	2-Amino-4-(pyridin-3-yl)pyrimidine	$PdCl_2(PPh_3)_2$ / Xantphos	NaOt-Bu	Toluene	Reflux	24	31
4	1-Bromo-4-nitrobenzene	2-Amino-4-(pyridin-3-yl)pyrimidine	$PdCl_2(PPh_3)_2$ / Xantphos	NaOt-Bu	Toluene	Reflux	24	27

Table 2: Buchwald-Hartwig Amination of 2,5-Dichloro-4,6-pyrimidinediamine[1]

© 2026 BenchChem. All rights reserved.

Entry	Pyrimidine Substrate	Amine	Catalyst/Ligand	Base	Solvent	Temp (°C)	Time (h)	Yield (%)
1	2,5-Dichloro-4,6-pyrimidinediamine	Morpholine	$Pd(OAc)_2$ / BINAP	Cs_2CO_3	Toluene	100	18	Varies
2	2,5-Dichloro-4,6-pyrimidinediamine	Aniline	$Pd_2(dba)_3$ / Xantphos	NaOt-Bu	Dioxane	100	12	Varies

Note: Yields are often reported as "good" or "excellent" in narrative descriptions and may vary depending on the specific amine used.

Mandatory Visualization

Catalytic Cycle of Buchwald-Hartwig Amination

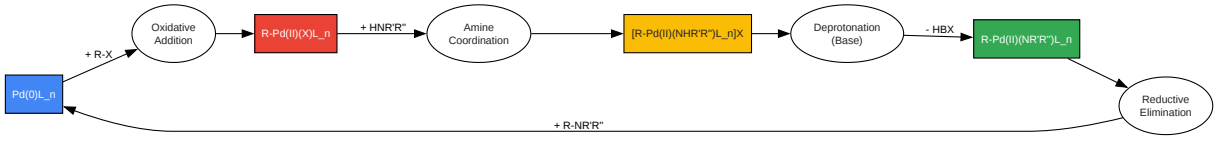

Click to download full resolution via product page

Caption: Catalytic cycle of the Buchwald-Hartwig amination.

© 2026 BenchChem. All rights reserved.

Experimental Workflow for C-N Cross-Coupling

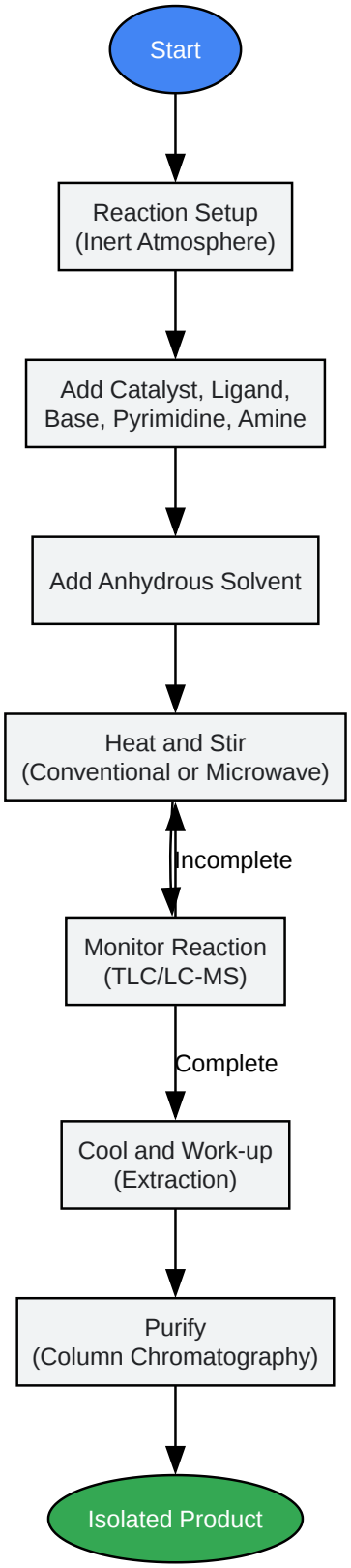

Click to download full resolution via product page

© 2026 BenchChem. All rights reserved.

Caption: General experimental workflow for C-N cross-coupling.

Need Custom Synthesis?

BenchChem offers custom synthesis for rare earth carbides and specific isotopiclabeling.

Email: info@benchchem.com or Request Quote Online.

References

- 1. benchchem.com [benchchem.com]
- 2. researchgate.net [researchgate.net]
- 3. pubs.acs.org [pubs.acs.org]
- 4. Synthesis of New N-Arylpyrimidin-2-amine Derivatives Using a Palladium Catalyst - PMC [pmc.ncbi.nlm.nih.gov]
- 5. Impact of Cross-Coupling Reactions in Drug Discovery and Development - PMC [pmc.ncbi.nlm.nih.gov]
- 6. researchgate.net [researchgate.net]
- 7. Palladium-Catalyzed C,N-Cross Coupling Reactions of 3-Halo-2-aminopyridines - PMC [pmc.ncbi.nlm.nih.gov]
- 8. Recent Advances in Pyrimidine-Based Drugs - PMC [pmc.ncbi.nlm.nih.gov]
- 9. pubs.acs.org [pubs.acs.org]
- 10. pubs.acs.org [pubs.acs.org]
- To cite this document: BenchChem. [Application Notes and Protocols for C-N Cross-Coupling with Pyrimidine Substrates]. BenchChem, [2026]. [Online PDF]. Available at: [https://www.benchchem.com/product/b112789/docs#application-notes-and-protocols-for-c-n-cross-coupling-with-pyrimidine-substrates]

Disclaimer & Data Validity:

The information provided in this document is for Research Use Only (RUO) and is strictly not intended for diagnostic or therapeutic procedures. While BenchChem strives to provide accurate protocols, we make no warranties, express or implied, regarding the fitness of this product for every specific experimental setup.

© 2026 BenchChem. All rights reserved.

Technical Support: The protocols provided are for reference purposes. Unsure if this reagent suits your experiment?

Need Industrial/Bulk Grade? Request Custom Synthesis Quote

BenchChem

Our mission is to be the trusted global source of essential and advanced chemicals, empowering scientists and researchers to drive progress in science and industry.

Contact

Address: 3281 E Guasti Rd

Ontario, CA 91761, United States

Phone: (601) 213-4426

Email: info@benchchem.com

Contact our Ph.D. Support Team for a compatibility check

© 2026 BenchChem. All rights reserved.