# Application Note: Comprehensive Analytical Characterization of 2-Isopropylthiazole-4-carbaldehyde

**Author**: BenchChem Technical Support Team. **Date**: May 2026

***Compound of Interest***

| | |
|---|---|
| *Compound Name:* | *2-Isopropylthiazole-4-carbaldehyde* |
| *CAS No.:* | *133047-46-8* |
| *Cat. No.:* | *B111681* |

*Get Quote*

## Abstract and Introduction

**2-Isopropylthiazole-4-carbaldehyde** is a heterocyclic aldehyde of significant interest in the flavor and fragrance industry and serves as a versatile building block in pharmaceutical synthesis. Its precise characterization is paramount for ensuring quality, purity, safety, and consistency in its applications. The presence of multiple functional groups—a thiazole ring, an isopropyl substituent, and a reactive aldehyde—necessitates a multi-faceted analytical approach for unambiguous identification, structural elucidation, and impurity profiling.

This guide provides a comprehensive suite of analytical protocols designed for researchers, quality control analysts, and drug development professionals. We move beyond mere procedural lists to explain the causality behind methodological choices, ensuring each protocol is a self-validating system. The methods detailed herein leverage chromatographic and spectroscopic techniques to create a holistic analytical workflow for **2-Isopropylthiazole-4-carbaldehyde**.

© 2026 BenchChem. All rights reserved.

# Compound Identity and Physicochemical Properties

A foundational step in any analytical endeavor is the confirmation of the molecule's basic properties.

Chemical Structure:

*Figure 1: Structure of **2-Isopropylthiazole-4-carbaldehyde***

Table 1: Core Physicochemical Data

| Property | Value | Source |
|---|---|---|
| IUPAC Name | **2-propan-2-yl-1,3-thiazole-4-carbaldehyde** | **[1]** |
| CAS Number | 133047-46-8 | [1][2] |
| Molecular Formula | $C_7H_9NOS$ | [1] |
| Molecular Weight | 155.22 g/mol | [1][2] |
| Boiling Point | 232.4 ± 13.0 °C at 760 mmHg | |
| Flash Point | 94.4 ± 19.8 °C | |

| Physical Form | Liquid | |

# Chromatographic Methods for Separation and Purity

Chromatography is the cornerstone for assessing the purity of **2-Isopropylthiazole-4-carbaldehyde** and quantifying it within complex matrices.[3] Due to its volatility, gas chromatography is the preferred method, while HPLC offers complementary capabilities for analyzing potential non-volatile impurities.

## Gas Chromatography (GC) for Volatile Analysis

GC provides exceptional resolution for volatile and thermally stable compounds like heterocyclic aldehydes.[4] Coupling with a Flame Ionization Detector (FID) offers robust quantification, while a Mass Spectrometer (MS) provides definitive identification.[3][5]

© 2026 BenchChem. All rights reserved.

- Principle: This method separates the analyte from volatile impurities based on boiling point and polarity differences. The FID response is proportional to the mass of carbon, allowing for accurate area-percent purity calculations.
- Instrumentation: Gas chromatograph equipped with a split/splitless injector and FID.
- Sample Preparation: Prepare a 1000 µg/mL solution of the sample in high-purity acetone or ethyl acetate.
- Experimental Parameters:
  - Column: HP-5 (or equivalent 5% phenyl-methylpolysiloxane), 30 m x 0.25 mm ID, 0.25 µm film thickness.
  - Carrier Gas: Helium or Hydrogen, constant flow rate of 1.0 mL/min.
  - Injector Temperature: 250 °C.
  - Injection Volume: 1 µL.
  - Split Ratio: 50:1 (adjust as needed for concentration).
  - Oven Program:
    - Initial Temperature: 60 °C, hold for 2 minutes.
    - Ramp: 10 °C/min to 240 °C.
    - Hold: Hold at 240 °C for 5 minutes.
  - Detector Temperature: 280 °C.
- Data Analysis: Calculate purity by the area percent method, where the peak area of **2-Isopropylthiazole-4-carbaldehyde** is expressed as a percentage of the total area of all observed peaks.
- Principle: This protocol confirms the identity by matching the analyte's retention time and its mass spectrum against a reference or library. The fragmentation pattern provides a structural

© 2026 BenchChem. All rights reserved.

fingerprint.[6][7]

- Instrumentation & Parameters: Use the same GC setup as in 3.1.1, but with the transfer line to the MS detector held at 260 °C.
  - MS Detector: Quadrupole or Ion Trap Mass Spectrometer.
  - Ionization Mode: Electron Ionization (EI) at 70 eV.
  - Mass Range: Scan from m/z 40 to 300.
  - Data Analysis: Confirm the molecular ion peak (m/z 155) and compare the fragmentation pattern with the reference spectrum provided in Section 4.2.

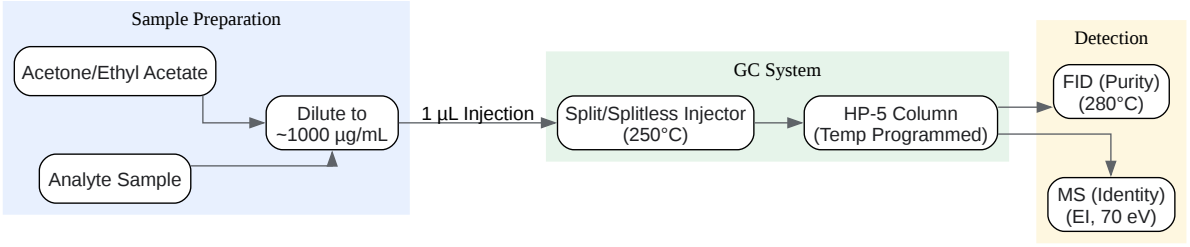


Click to download full resolution via product page

**Diagram 1:** General workflow for GC-based analysis.

## High-Performance Liquid Chromatography (HPLC)

While GC is primary, RP-HPLC is invaluable for detecting non-volatile, highly polar, or thermally labile impurities, such as the corresponding carboxylic acid oxidation product.[8]

- Principle: This method separates compounds based on their hydrophobicity. A C18 column retains non-polar compounds longer than polar ones. UV detection is suitable due to the conjugated system in the thiazole ring.

© 2026 BenchChem. All rights reserved.

- Instrumentation: HPLC system with a quaternary pump, autosampler, column oven, and Diode Array Detector (DAD) or UV-Vis detector.
- Sample Preparation: Prepare a 500 µg/mL solution of the sample in a 50:50 mixture of acetonitrile and water.
- Experimental Parameters:
  - Column: C18, 4.6 x 150 mm, 5 µm particle size.
  - Mobile Phase A: 0.1% Formic Acid in Water.
  - Mobile Phase B: 0.1% Formic Acid in Acetonitrile.
  - Flow Rate: 1.0 mL/min.
  - Column Temperature: 30 °C.
  - Gradient Program:
    - 0-2 min: 20% B.
    - 2-15 min: Linear gradient from 20% to 95% B.
    - 15-18 min: Hold at 95% B.
    - 18.1-22 min: Return to 20% B for equilibration.
  - Detection: UV at 265 nm (determine λmax by DAD scan).
- Data Analysis: Analyze the chromatogram for impurity peaks. Use a reference standard for quantification if available.

© 2026 BenchChem. All rights reserved.

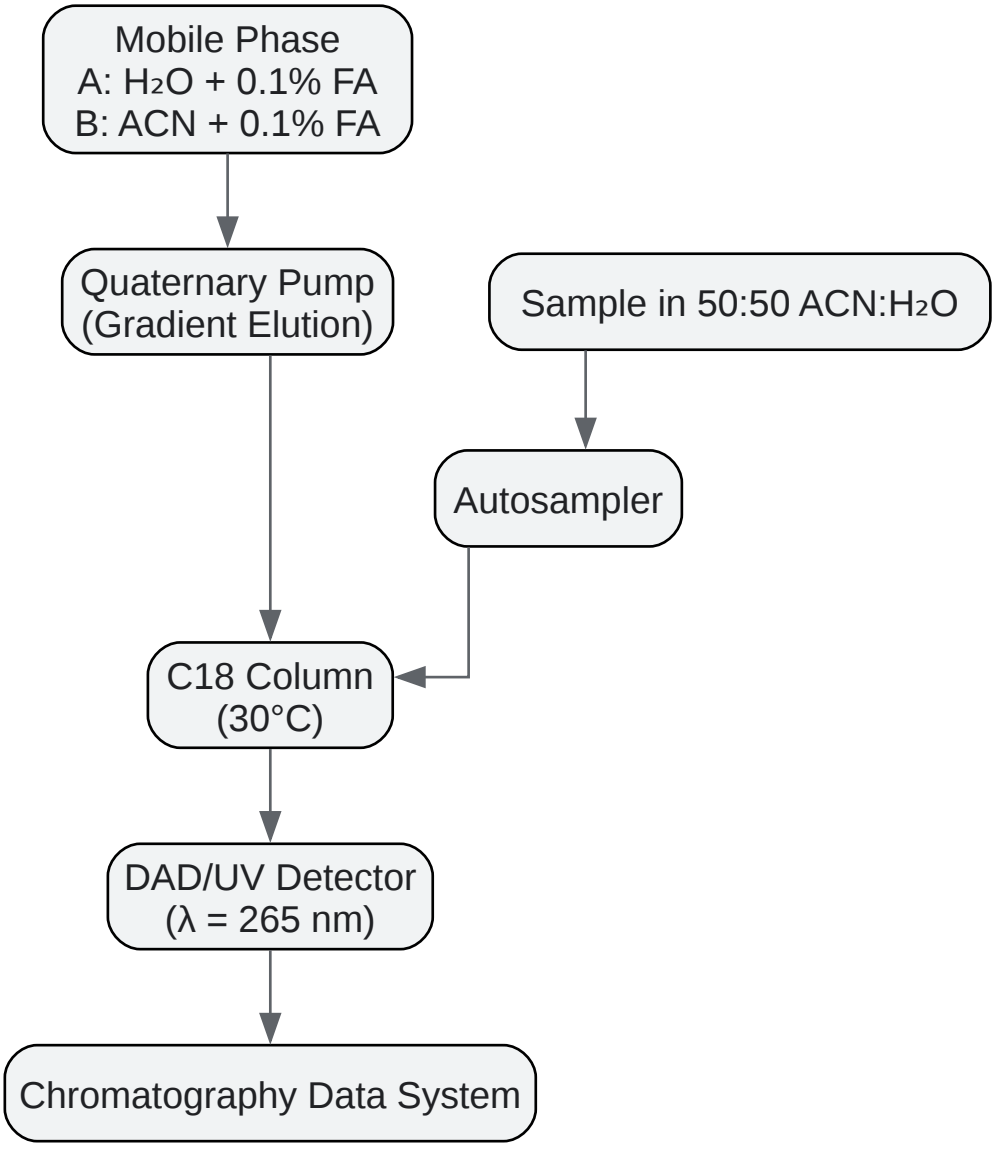


Click to download full resolution via product page

**Diagram 2:** Workflow for RP-HPLC impurity analysis.

# Spectroscopic Methods for Structural Elucidation

Spectroscopic techniques provide definitive structural information, complementing the data from chromatographic separations.

## Nuclear Magnetic Resonance (NMR) Spectroscopy

NMR is the most powerful tool for unambiguous structural confirmation.[9][10] It provides detailed information about the carbon-hydrogen framework.

© 2026 BenchChem. All rights reserved.

- Principle: Nuclei with a non-zero spin (like $^{1}H$ and $^{13}C$) align in a magnetic field. Radiofrequency pulses perturb this alignment, and the signal emitted upon relaxation is detected. The signal's frequency (chemical shift) is unique to the chemical environment of each nucleus.
- Instrumentation: 400 MHz (or higher) NMR spectrometer.
- Sample Preparation: Dissolve ~10-20 mg of the sample in ~0.6 mL of deuterated chloroform ($CDCl_3$) or dimethyl sulfoxide (DMSO-$d_6$) containing 0.03% tetramethylsilane (TMS) as an internal standard.
- Data Acquisition:
  - Acquire a standard $^{1}H$ spectrum.
  - Acquire a proton-decoupled $^{13}C$ spectrum.
  - (Optional but Recommended): Perform 2D NMR experiments like COSY ($^{1}H$-$^{1}H$ correlation) and HSQC ($^{1}H$-$^{13}C$ correlation) to confirm assignments.
- Expected Chemical Shifts: The following table provides predicted chemical shifts based on the structure and data from similar heterocyclic aldehydes.[11][12]

Table 2: Predicted NMR Spectral Data (in $CDCl_3$)

© 2026 BenchChem. All rights reserved.

| Atom/Group | $^{1}$H NMR (δ, ppm) | $^{13}$C NMR (δ, ppm) | Notes |
|---|---|---|---|
| Aldehyde | **~9.9 - 10.1 (s, 1H)** | **~185 - 190** | **Aldehyde proton is a sharp singlet, highly deshielded.** |
| Thiazole H-5 | ~8.1 - 8.3 (s, 1H) | ~148 - 152 | Aromatic proton on the thiazole ring. |
| Isopropyl CH | ~3.3 - 3.5 (sept, 1H) | ~34 - 38 | Methine proton, split into a septet by 6 methyl protons. |
| Isopropyl $CH_3$ | ~1.3 - 1.5 (d, 6H) | ~22 - 24 | Two equivalent methyl groups, split into a doublet by the CH. |
| Thiazole C-2 | - | ~175 - 180 | Quaternary carbon attached to the isopropyl group. |

| Thiazole C-4 | - | ~150 - 155 | Quaternary carbon attached to the aldehyde group. |

## Mass Spectrometry (MS)

Mass spectrometry provides the molecular weight and crucial structural information through fragmentation analysis.[13] The fragmentation pattern is highly dependent on the ionization method.

- Principle (EI): In GC-MS, high-energy electrons bombard the molecule, causing ionization and fragmentation. The resulting charged fragments are separated by their mass-to-charge ratio (m/z), creating a unique fragmentation pattern.[14]
- Expected Fragmentation Pattern: Thiazoles typically show an abundant molecular ion.[13][15] Key fragmentations for **2-Isopropylthiazole-4-carbaldehyde** would involve:
  - Loss of the isopropyl group ($[M-43]^+$).
  - Loss of the aldehyde group CHO ($[M-29]^+$).

© 2026 BenchChem. All rights reserved.

- Cleavage of the thiazole ring.

Table 3: Predicted Key Fragments in EI-MS

| m/z | Proposed Fragment | Notes |
|---|---|---|
| 155 | $[C_7H_9NOS]^+$ | Molecular Ion ($M^+$) |
| 140 | $[M - CH_3]^+$ | Loss of a methyl radical from the isopropyl group. |
| 126 | $[M - CHO]^+$ | Loss of the formyl radical. |
| 112 | $[M - C_3H_7]^+$ | Loss of the isopropyl radical. |

| 85 | $[C_4H_3N_2S]^+$ | Fragment from thiazole ring cleavage. |

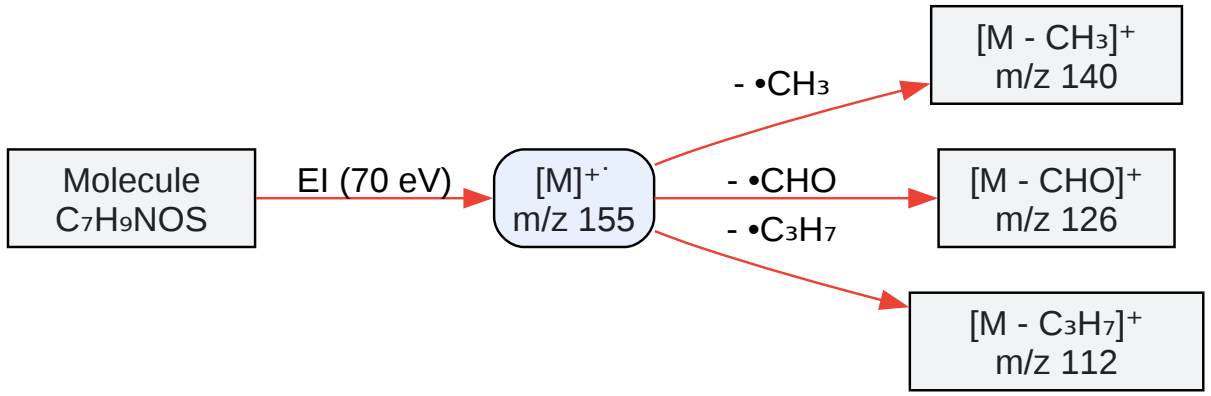


Click to download full resolution via product page

**Diagram 3:** Predicted primary fragmentation pathways in EI-MS.

## Infrared (IR) Spectroscopy

FT-IR is a rapid and non-destructive technique used to identify the presence of key functional groups.

- Principle: Molecules absorb infrared radiation at specific frequencies corresponding to the vibrational energies of their functional groups.

© 2026 BenchChem. All rights reserved.

- Protocol: Acquire a spectrum of the neat liquid sample using an ATR (Attenuated Total Reflectance) accessory on an FT-IR spectrometer.
- Expected Absorption Bands:

Table 4: Characteristic IR Absorption Bands

| Wavenumber ($cm^{-1}$) | Vibration | Functional Group |
|---|---|---|
| ~2970, ~2870 | **C-H stretch** | **Isopropyl group** |
| ~2820, ~2720 | C-H stretch | Aldehyde C-H (Fermi doublet) |
| ~1690 - 1710 | C=O stretch | Aldehyde carbonyl (strong) |
| ~1500 - 1600 | C=N, C=C stretch | Thiazole ring vibrations |

| ~1385, ~1370 | C-H bend | Isopropyl gem-dimethyl split |

# Integrated Analytical Strategy and Conclusion

The robust characterization of **2-Isopropylthiazole-4-carbaldehyde** is not achieved by a single technique but by the logical integration of multiple analytical methods. The proposed workflow is as follows:

- Identity Confirmation: Use GC-MS to confirm the molecular weight (m/z 155) and match the fragmentation pattern.[1]
- Structural Verification: Employ $^{1}H$ and $^{13}C$ NMR to provide unambiguous confirmation of the molecular structure and connectivity.
- Functional Group Analysis: Use FT-IR as a rapid check to verify the presence of key functional groups, particularly the aldehyde carbonyl.
- Purity Assessment: Utilize GC-FID for quantitative purity analysis of volatile components and RP-HPLC-UV to screen for non-volatile or polar impurities.

This comprehensive approach ensures that the identity, structure, and purity of **2-Isopropylthiazole-4-carbaldehyde** are established with a high degree of scientific confidence,

© 2026 BenchChem. All rights reserved.

meeting the rigorous standards of the pharmaceutical and flavor industries.

## References


- Journal of the Chemical Society B: Physical Organic. (n.d.). Studies in mass spectrometry. Part VII. Mass spectra of thiazoles. RSC Publishing.
- Semantic Scholar. (n.d.). Studies in mass spectrometry. Part VII. Mass spectra of thiazoles.
- Wiley Analytical Science. (2009). An HPLC taste test.
- Restek. (n.d.). FOODS FLAVORS FRAGRANCES. Cloudfront.net.
- Taylor & Francis Online. (n.d.). A study with sensory evaluation and GC-MS/HPLC analysis on changes of flavor compounds in mutton during storage.
- ResearchGate. (n.d.).
- PubMed Central. (n.d.). A synergistic investigation of azo-thiazole derivatives incorporating thiazole moieties: a comprehensive exploration of their synthesis, characterization, computational insights, solvatochromism, and multimodal biological activity assessment.
- PubMed. (2014). Application of 2D-HPLC/taste dilution analysis on taste compounds in aniseed (Pimpinella anisum L.).
- PubMed Central. (2023). Differentiation between Isomeric 4,5-Functionalized 1,2,3-Thiadiazoles and 1,2,3-Triazoles by ESI-HRMS and IR Ion Spectroscopy.
- PubChem. (n.d.). 2-(Propan-2-yl)-1,3-thiazole-4-carbaldehyde.
- PubChem. (n.d.). 2-Isopropyl-4-methylthiazole.
- AHH Chemical Co., Ltd. (n.d.). **2-Isopropylthiazole-4-carbaldehyde** | 133047-46-8.
- ChemicalBook. (n.d.). 2-Isopropyl-4-methyl thiazole(15679-13-7) 1H NMR spectrum.
- Chromtech. (n.d.).
- MDPI. (2020). Heterocyclic Aldehydes Based on Thieno[3,2-b]thiophene Core: Synthesis and Preliminary Studies as Ion Optical Chemosensors.
- Pharmaffiliates. (n.d.). CAS No : 133047-46-8 | Product Name : **2-Isopropylthiazole-4-carbaldehyde**.
- BenchChem. (2025).
- Moldb. (n.d.). 184154-42-5 | 4-Isopropylthiazole-2-carbaldehyde.
- Google Patents. (n.d.). Method for synthesizing 2-isopropyl-4-(methylaminomethyl)thiazole.
- PubMed. (2003).
- IOPscience. (n.d.). Using GC-MS Technology to Identify the Compounds Resulting from Mixing of Alcoholic Extracts of Some Medicinal Plants.
- ChemRxiv. (2025). Design, Synthesis, Characterization, Evaluation Antimicrobial Evaluation of 2 – Amino Thiazole Based Lead Compound : Docking Analysis of Ortho and Meta Substituted Analogues.
- Google Patents. (n.d.).


© 2026 BenchChem. All rights reserved.

**Need Custom Synthesis?**

*BenchChem offers custom synthesis for rare earth carbides and specific isotopiclabeling.*

*Email: info@benchchem.com or Request Quote Online.*

# Sources


- 1. 2-(Propan-2-yl)-1,3-thiazole-4-carbaldehyde | C7H9NOS | CID 2763192 - PubChem [pubchem.ncbi.nlm.nih.gov]
- 2. pharmaffiliates.com [pharmaffiliates.com]
- 3. d1lqgfmy9cwjff.cloudfront.net [d1lqgfmy9cwjff.cloudfront.net]
- 4. chromtech.net.au [chromtech.net.au]
- 5. Capillary gas chromatography determination of benzaldehyde arising from benzyl alcohol used as preservative in injectable formulations - PubMed [pubmed.ncbi.nlm.nih.gov]
- 6. tandfonline.com [tandfonline.com]
- 7. Using GC-MS Technology to Identify the Compounds Resulting from Mixing of Alcoholic Extracts of Some Medicinal Plants [jmchemsci.com]
- 8. benchchem.com [benchchem.com]
- 9. A synergistic investigation of azo-thiazole derivatives incorporating thiazole moieties: a comprehensive exploration of their synthesis, characterization, computational insights, solvatochromism, and multimodal biological activity assessment - PMC [pmc.ncbi.nlm.nih.gov]
- 10. chemrxiv.org [chemrxiv.org]
- 11. 2-Isopropyl-4-methylthiazole | C7H11NS | CID 61808 - PubChem [pubchem.ncbi.nlm.nih.gov]
- 12. mdpi.com [mdpi.com]
- 13. Studies in mass spectrometry. Part VII. Mass spectra of thiazoles - Journal of the Chemical Society B: Physical Organic (RSC Publishing) [pubs.rsc.org]
- 14. researchgate.net [researchgate.net]
- 15. Studies in mass spectrometry. Part VII. Mass spectra of thiazoles | Semantic Scholar [semanticscholar.org]


© 2026 BenchChem. All rights reserved.

- To cite this document: BenchChem. [Application Note: Comprehensive Analytical Characterization of 2-Isopropylthiazole-4-carbaldehyde]. BenchChem, [2026]. [Online PDF]. Available at: [https://www.benchchem.com/product/b111681/docs#application-note-comprehensive-analytical-characterization-of-2-isopropylthiazole-4-carbaldehyde]

---

**Disclaimer & Data Validity:**

The information provided in this document is for Research Use Only (RUO) and is strictly not intended for diagnostic or therapeutic procedures. While BenchChem strives to provide accurate protocols, we make no warranties, express or implied, regarding the fitness of this product for every specific experimental setup.

**Technical Support:**The protocols provided are for reference purposes. Unsure if this reagent suits your experiment?

**Need Industrial/Bulk Grade?** Request Custom Synthesis Quote

BenchChem

Our mission is to be the trusted global source of essential and advanced chemicals, empowering scientists and researchers to drive progress in science and industry.

Contact

Address: 3281 E Guasti Rd

Ontario, CA 91761, United States

Phone: (601) 213-4426

Email: info@benchchem.com

Contact our Ph.D. Support Team for a compatibility check