# A Comparative Spectroscopic Guide to 4-Bromo-Indene Isomers

**Author**: BenchChem Technical Support Team. **Date**: May 2026

***Compound of Interest***

| | |
|---|---|
| *Compound Name:* | *4-Bromo-2-methyl-1h-indene* |
| *CAS No.:* | *328085-65-0* |
| *Cat. No.:* | *B110220* |

*Get Quote*

For researchers, scientists, and professionals in drug development, the precise characterization of molecular structures is paramount. Bromo-indenes, as versatile synthetic intermediates, often present a challenge in the unambiguous determination of the bromine substituent's position on the indene scaffold. This guide provides an in-depth comparison of the spectroscopic data for four key isomers: 4-bromo-indene, 5-bromo-indene, 6-bromo-indene, and 7-bromo-indene. By understanding the subtle yet significant differences in their NMR, IR, and mass spectra, researchers can confidently identify and differentiate these closely related compounds.

## Introduction: The Challenge of Isomer Differentiation

The indene core is a valuable structural motif in medicinal chemistry and materials science. Bromination of the indene ring system can lead to a mixture of isomers, and the isolation and characterization of the desired isomer are critical for subsequent synthetic steps. Spectroscopic techniques are the cornerstone of this characterization process. However, the similar overall structure of the bromo-indene isomers can lead to overlapping signals and complex spectra, necessitating a careful and comparative analysis. This guide will delve into the nuances of $^1$H

© 2026 BenchChem. All rights reserved.

NMR, $^{13}C$ NMR, IR, and mass spectrometry to provide a clear framework for distinguishing between the 4-, 5-, 6-, and 7-bromo-indene isomers.

## Synthesis of Bromo-Indene Isomers: A Brief Overview

The synthesis of specific bromo-indene isomers often involves multi-step procedures, starting from appropriately substituted precursors. For instance, the synthesis of 4-bromo-1-indanone, a precursor to 4-bromo-indene, can be achieved through the intramolecular Friedel-Crafts cyclization of 3-(2-bromophenyl)propanoic acid[1]. Subsequent reduction and dehydration steps would then yield the target 4-bromo-indene. Similar strategies, employing different starting materials, are used to access the other isomers. It is crucial to be aware of the synthetic route, as potential side-products or regioisomers could complicate spectral interpretation.

## Comparative Spectroscopic Analysis

A thorough analysis of the spectroscopic data is essential for the definitive identification of each bromo-indene isomer. The following sections will highlight the key distinguishing features in each type of spectrum.

### $^{1}H$ Nuclear Magnetic Resonance (NMR) Spectroscopy

The $^{1}H$ NMR spectrum is arguably the most powerful tool for differentiating these isomers. The position of the bromine atom significantly influences the chemical shifts and coupling patterns of the aromatic and olefinic protons.

Key Diagnostic Regions in the $^{1}H$ NMR Spectrum:

- Aromatic Region (δ 7.0 - 7.8 ppm): The substitution pattern on the benzene ring of the indene core is unique for each isomer, leading to distinct splitting patterns.
    - 4-Bromo-indene: Expect a complex multiplet for the three aromatic protons. The proton at C7, being ortho to the bromine, will likely be the most deshielded.
    - 5-Bromo-indene: This isomer will show a more straightforward pattern. H-4 and H-6 will be doublets, and H-7 will be a singlet (or a narrow doublet due to long-range coupling).

© 2026 BenchChem. All rights reserved.

- 6-Bromo-indene: Similar to the 5-bromo isomer, expect distinct signals. H-5 and H-7 will be doublets, and H-4 will be a singlet.
- 7-Bromo-indene: This will also display a complex multiplet for the three aromatic protons, with the proton at C6 being the most deshielded due to its proximity to the bromine atom.

- Olefinic Region (δ 6.5 - 7.0 ppm): The protons on the five-membered ring (H-1, H-2, and H-3) will also show characteristic shifts and couplings. The allylic coupling between the C1 methylene protons and the C2 and C3 vinylic protons is a key feature.
- Aliphatic Region (δ 3.0 - 3.5 ppm): The methylene protons at the C1 position typically appear as a triplet.

## $^{13}$C Nuclear Magnetic Resonance (NMR) Spectroscopy

The $^{13}$C NMR spectrum provides complementary information, particularly regarding the carbon atoms directly bonded to the bromine and those in its immediate vicinity.

Key Diagnostic Features in the $^{13}$C NMR Spectrum:

- C-Br Signal: The carbon atom directly attached to the bromine atom will exhibit a characteristic chemical shift, typically in the range of δ 115-125 ppm. The exact position will vary slightly between isomers.
- Quaternary Carbons: The chemical shifts of the quaternary carbons of the indene ring system (C3a and C7a) will be influenced by the position of the bromine atom.
- Aromatic and Olefinic Carbons: The chemical shifts of the other aromatic and olefinic carbons will also be affected by the electron-withdrawing effect of the bromine atom, providing a unique fingerprint for each isomer.

## Infrared (IR) Spectroscopy

Infrared spectroscopy is useful for confirming the presence of key functional groups and providing information about the substitution pattern on the aromatic ring.

Key Diagnostic Bands in the IR Spectrum:

© 2026 BenchChem. All rights reserved.

- C-H Stretching: Aromatic C-H stretching vibrations are typically observed above 3000 $cm^{-1}$, while aliphatic C-H stretching appears below 3000 $cm^{-1}$.
- C=C Stretching: Aromatic and olefinic C=C stretching bands are found in the 1600-1450 $cm^{-1}$ region. The pattern of these bands can sometimes give clues about the substitution pattern.
- Out-of-Plane C-H Bending: The out-of-plane C-H bending vibrations in the 900-650 $cm^{-1}$ region are often highly characteristic of the substitution pattern on the benzene ring. Each isomer will have a unique pattern of bands in this region.
- C-Br Stretching: The C-Br stretching vibration is typically observed in the far-infrared region (below 600 $cm^{-1}$) and may be difficult to observe with standard instrumentation.

## Mass Spectrometry (MS)

Mass spectrometry provides information about the molecular weight and the isotopic pattern of the molecule, which is particularly useful for compounds containing bromine.

Key Diagnostic Features in the Mass Spectrum:

- Molecular Ion Peak ($M^+$): The mass spectrum will show a characteristic pair of molecular ion peaks ($M^+$ and M+2) of nearly equal intensity, which is a definitive indicator of the presence of one bromine atom. The nominal mass of the bromo-indene isomers is 194 and 196 g/mol .
- Fragmentation Pattern: The fragmentation pattern can also provide structural clues. Common fragmentation pathways include the loss of a bromine atom ($[M-Br]^+$) and the loss of HBr ($[M-HBr]^+$).

# Data Summary and Comparison

To facilitate a direct comparison, the following table summarizes the key expected spectroscopic data for the four bromo-indene isomers. Please note that the exact values may vary slightly depending on the solvent and the specific instrument used.

© 2026 BenchChem. All rights reserved.

| Spectroscopic Technique | 4-Bromo-indene | 5-Bromo-indene | 6-Bromo-indene | 7-Bromo-indene |
|---|---|---|---|---|
| $^{1}$H NMR (Aromatic) | Complex multiplet | H-4 (d), H-6 (d), H-7 (s) | H-5 (d), H-7 (d), H-4 (s) | Complex multiplet |
| $^{13}$C NMR (C-Br) | ~120 ppm | ~122 ppm | ~123 ppm | ~118 ppm |
| IR (Out-of-Plane C-H) | Characteristic pattern for 1,2,3-trisubstitution | Characteristic pattern for 1,2,4-trisubstitution | Characteristic pattern for 1,2,4-trisubstitution | Characteristic pattern for 1,2,3-trisubstitution |
| Mass Spec ($M^+$, M+2) | 194, 196 | 194, 196 | 194, 196 | 194, 196 |

# Experimental Protocols

Accurate and reproducible spectroscopic data are contingent upon proper sample preparation and instrument operation.

## NMR Spectroscopy Sample Preparation

- Weigh 5-10 mg of the bromo-indene isomer into a clean, dry NMR tube.
- Add approximately 0.6-0.7 mL of a deuterated solvent (e.g., $CDCl_3$).
- Add a small amount of an internal standard, such as tetramethylsilane (TMS).
- Cap the NMR tube and gently agitate to ensure complete dissolution.

## FT-IR Spectroscopy Sample Preparation (ATR)

- Ensure the ATR crystal is clean.
- Place a small amount of the liquid or solid bromo-indene sample directly onto the crystal.
- Apply pressure to ensure good contact between the sample and the crystal.
- Acquire the spectrum.

© 2026 BenchChem. All rights reserved.

## Mass Spectrometry (GC-MS) Sample Preparation

- Prepare a dilute solution of the bromo-indene isomer in a volatile solvent (e.g., dichloromethane or hexane).
- Inject an appropriate volume of the solution into the GC-MS instrument.

## Visualizing the Isomers

To aid in the conceptualization of the different isomers, the following diagrams illustrate their chemical structures.

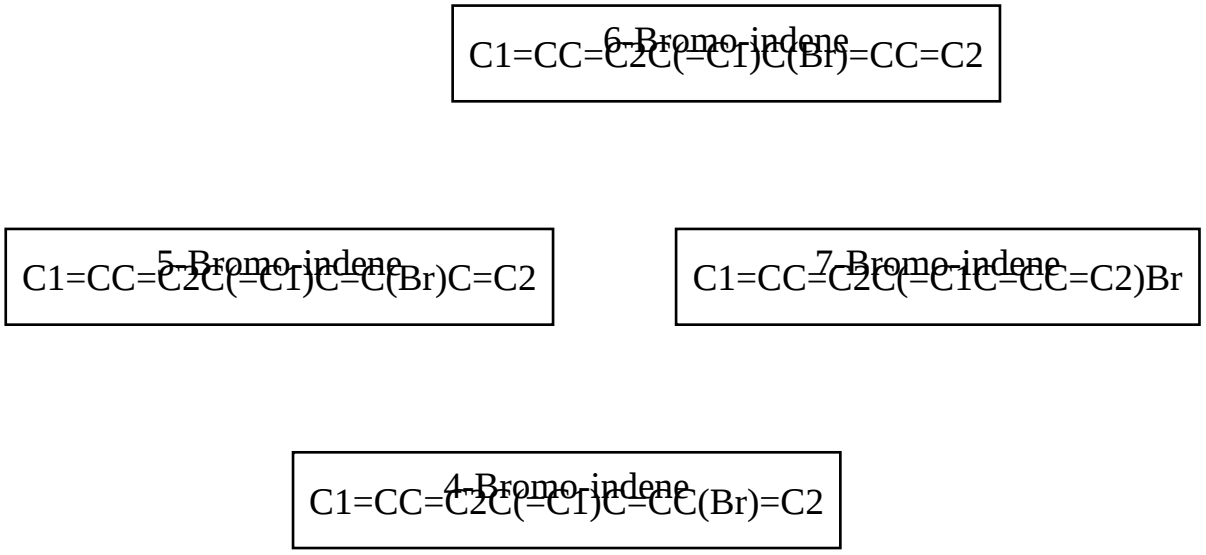


Click to download full resolution via product page

Caption: Chemical structures of the four bromo-indene isomers.

## Conclusion

The differentiation of 4-, 5-, 6-, and 7-bromo-indene isomers, while challenging, is readily achievable through a systematic and comparative analysis of their spectroscopic data. The $^{1}H$ NMR spectrum, with its distinct aromatic region patterns, serves as the primary tool for identification. Complementary information from $^{13}C$ NMR, IR, and mass spectrometry provides confirmation and a more complete structural picture. By following the guidelines and utilizing the comparative data presented in this guide, researchers can confidently characterize their bromo-indene samples, ensuring the integrity and success of their synthetic endeavors.

© 2026 BenchChem. All rights reserved.

## References


- Oliverio, M., Nardi, M., Costanzo, P., Cariati, L., Cravotto, G., Giofrè, S. V., & Procopio, A. (2014). Non-Conventional Methodologies in the Synthesis of 1-Indanones. Molecules, 19(5), 5599–5610. [Link]



***Need Custom Synthesis?***

*BenchChem offers custom synthesis for rare earth carbides and specific isotopiclabeling.*

*Email: info@benchchem.com or Request Quote Online.*


## Sources


- 1. 5-Bromo-1-indanone(34598-49-7) 1H NMR spectrum [chemicalbook.com]
- To cite this document: BenchChem. [A Comparative Spectroscopic Guide to 4-Bromo-Indene Isomers]. BenchChem, [2026]. [Online PDF]. Available at: [https://www.benchchem.com/product/b110220/docs#a-comparative-spectroscopic-guide-to-4-bromo-indene-isomers]


---

**Disclaimer & Data Validity:**

The information provided in this document is for Research Use Only (RUO) and is strictly not intended for diagnostic or therapeutic procedures. While BenchChem strives to provide accurate protocols, we make no warranties, express or implied, regarding the fitness of this product for every specific experimental setup.

**Technical Support:**The protocols provided are for reference purposes. Unsure if this reagent suits your experiment?

**Need Industrial/Bulk Grade?** Request Custom Synthesis Quote

# BenchChem

Our mission is to be the trusted global source of essential and advanced chemicals, empowering scientists and researchers to drive progress in science and industry.

Contact

Address: 3281 E Guasti Rd

Ontario, CA 91761, United States

Phone: (601) 213-4426

Email: info@benchchem.com

Contact our Ph.D. Support Team for a compatibility check

© 2026 BenchChem. All rights reserved.