Comparative Guide: Synthesis Routes for Functionalized Pyrazoles

Author: BenchChem Technical Support Team. **Date**: February 2026

Compound of Interest		
Compound Name:	*(4-ethoxyphenyl)(1H-pyrazol-1-yl)methanone*	
Cat. No.:	*B10964343*	Get Quote

Executive Summary

The pyrazole scaffold is a cornerstone of modern medicinal chemistry, serving as the pharmacophore in blockbuster drugs like Celecoxib (Celebrex), Sildenafil (Viagra), and Ruxolitinib (Jakafi). For the drug development professional, the challenge is no longer just making a pyrazole, but making it with precise regiocontrol and functional group tolerance suitable for late-stage diversification.

This guide moves beyond basic textbook definitions to objectively compare three distinct synthetic philosophies: the classical condensation (Knorr), the catalytic cycloaddition ([3+2]), and the emerging direct functionalization (C-H activation).

Strategic Overview: The Regioselectivity Bottleneck

The primary failure mode in pyrazole synthesis is the formation of inseparable regioisomers (e.g., 1,3- vs. 1,5-disubstituted). Your choice of route dictates your ability to control this outcome.

© 2026 BenchChem. All rights reserved.

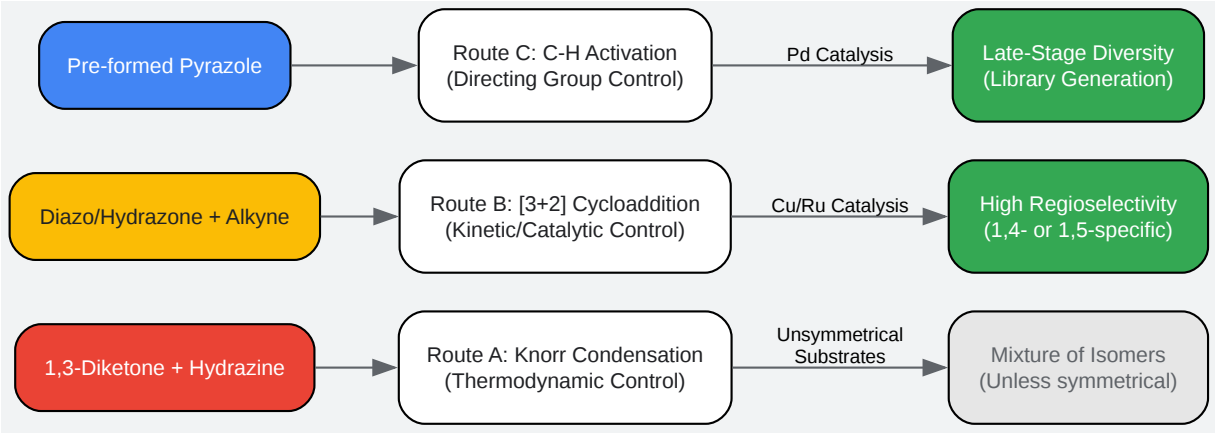

Click to download full resolution via product page

Figure 1: Decision matrix for selecting a synthesis route based on starting material availability and required regiocontrol.

Detailed Route Analysis[1]

Route A: The Modern Knorr Condensation

Best for: Scale-up of symmetrical pyrazoles and simple building blocks.

While the classical Knorr synthesis often requires refluxing in ethanol/acetic acid, modern "Green" variants utilize aqueous media to drive precipitation of the product, simplifying purification.

- Mechanism: Acid-catalyzed formation of a hydrazone intermediate followed by intramolecular cyclization.
- The Trap: With unsymmetrical 1,3-diketones, the hydrazine attacks the most electrophilic carbonyl first. If electrophilicity is similar, you get a ~1:1 mixture of isomers.
- Modern Twist: Using surrogates like enaminones or alkynones can improve regioselectivity compared to diketones.

Route B: Catalytic [3+2] Cycloaddition

© 2026 BenchChem. All rights reserved.

Best for: Complex, polysubstituted pyrazoles requiring strict regiocontrol.

This approach mirrors "Click" chemistry. By using metal catalysts (Cu or Ru), the reaction trajectory is controlled by the metal center rather than substrate sterics/electronics alone.

- Mechanism: Concerted [3+2] cycloaddition. Copper(I) typically favors 1,4-disubstitution (via sydnones) or 3,5-disubstitution (via terminal alkynes/diazo), while Ruthenium can invert this selectivity.
- Key Advantage: Mild conditions (often room temp) and high functional group tolerance (compatible with esters, amides, halides).

Route C: Late-Stage C-H Functionalization

Best for: Drug discovery (SAR) campaigns and library generation.

Instead of building the ring, this route decorates an existing pyrazole core. This is ideal for "walking" a substituent around the ring to probe biological activity.

- Mechanism: Transition metal (Pd, Rh, Ru) catalyzed activation of the C-H bond.
- Regioselectivity Logic:
  - C5-H: Most acidic proton; favored by N1-directing groups and specific conditions (e.g., Pd(OAc)2).
  - C4-H: Most nucleophilic position; favored by electrophilic aromatic substitution (SEAr) or radical pathways.
  - C3-H: Least reactive; often requires blocking C4/C5 or specific directing groups (e.g., N-oxide).

Head-to-Head Comparison

© 2026 BenchChem. All rights reserved.

Feature	Route A: Knorr (Condensation)	Route B: [3+2] Cycloaddition	Route C: C-H Activation
Regioselectivity	Low (Substrate dependent)	High (Catalyst controlled)	High (Directing group controlled)
Atom Economy	High (Water byproduct)	Excellent (100% atom economy)	Moderate (Leaving groups/oxidants)
Substrate Scope	Limited to 1,3-dicarbonyls	Broad (Alkynes, Diazo, Hydrazones)	Broad (Aryl halides + Pyrazoles)
Reaction Conditions	Robust, often acidic/thermal	Mild, often RT	Sensitive (Inert atm, high temp)
Scalability	Excellent (Industrial standard)	Good (Safety concerns with diazo)	Moderate (Cost of Pd/Ligands)
Primary Use Case	Manufacturing core scaffolds	Constructing complex cores	Late-stage diversification (SAR)

Deep Dive Protocol: Pd-Catalyzed C5-Arylation

Selected for its high relevance to modern drug discovery workflows.

Objective: Regioselective C5-arylation of a 1-methylpyrazole-4-carboxylate. Rationale: The ester group at C4 blocks the nucleophilic site and activates the C5-H bond, while the N1-methyl acts as a weak directing group.

Materials

- Substrate: Ethyl 1-methylpyrazole-4-carboxylate (1.0 equiv)
- Coupling Partner: Aryl Bromide (1.0 equiv)[1]
- Catalyst: Palladium(II) Acetate [$Pd(OAc)_2$] (5 mol%)
- Base: Potassium Acetate [KOAc] (2.0 equiv)[1]
- Solvent:N,N-Dimethylacetamide (DMAc) [Anhydrous]

© 2026 BenchChem. All rights reserved.

Step-by-Step Methodology

- Setup: Oven-dry a 25 mL Schlenk tube and equip it with a magnetic stir bar. Allow to cool under a stream of argon.
- Charging: Add Ethyl 1-methylpyrazole-4-carboxylate (1.5 mmol), Aryl Bromide (1.0 mmol), KOAc (2.0 mmol), and $Pd(OAc)_2$ (0.05 mmol) to the tube.
  - Note: If the aryl bromide is a liquid, add it via syringe after the solvent.
- Solvation: Add anhydrous DMAc (4 mL) via syringe.
- Degassing: Perform 3 cycles of Freeze-Pump-Thaw OR vigorously purge with argon for 10 minutes to remove dissolved oxygen (Critical for Pd(0)/Pd(II) cycle stability).
- Reaction: Seal the tube and heat to 150°C in an oil bath for 16 hours.
  - Visual Check: The reaction mixture typically turns black (Pd black formation) if the catalyst decomposes too early; a dark brown solution is normal.
- Work-up: Cool to room temperature. Dilute with Ethyl Acetate (20 mL) and filter through a pad of Celite to remove inorganic salts and Pd residues.
- Extraction: Wash the filtrate with water (3 x 10 mL) to remove DMAc (DMAc is high boiling and water-soluble). Wash with brine (1 x 10 mL).
- Purification: Dry organic layer over Na_2SO_4, concentrate in vacuo, and purify via flash column chromatography (Hexanes/Ethyl Acetate gradient).

Self-Validating Check:

- 1H NMR: Look for the disappearance of the C5-H singlet (typically ~7.8-8.0 ppm for this substrate) and the appearance of aromatic signals from the new aryl group.
- Regio-check: If C4 was attacked, the ester group would be displaced or the integration would not match. The C4-ester prevents C4-arylation, ensuring C5 selectivity.

Mechanism of Action: C-H Activation

© 2026 BenchChem. All rights reserved.

The following diagram illustrates the catalytic cycle for the described protocol, highlighting the role of the base and the Concerted Metalation-Deprotonation (CMD) pathway.

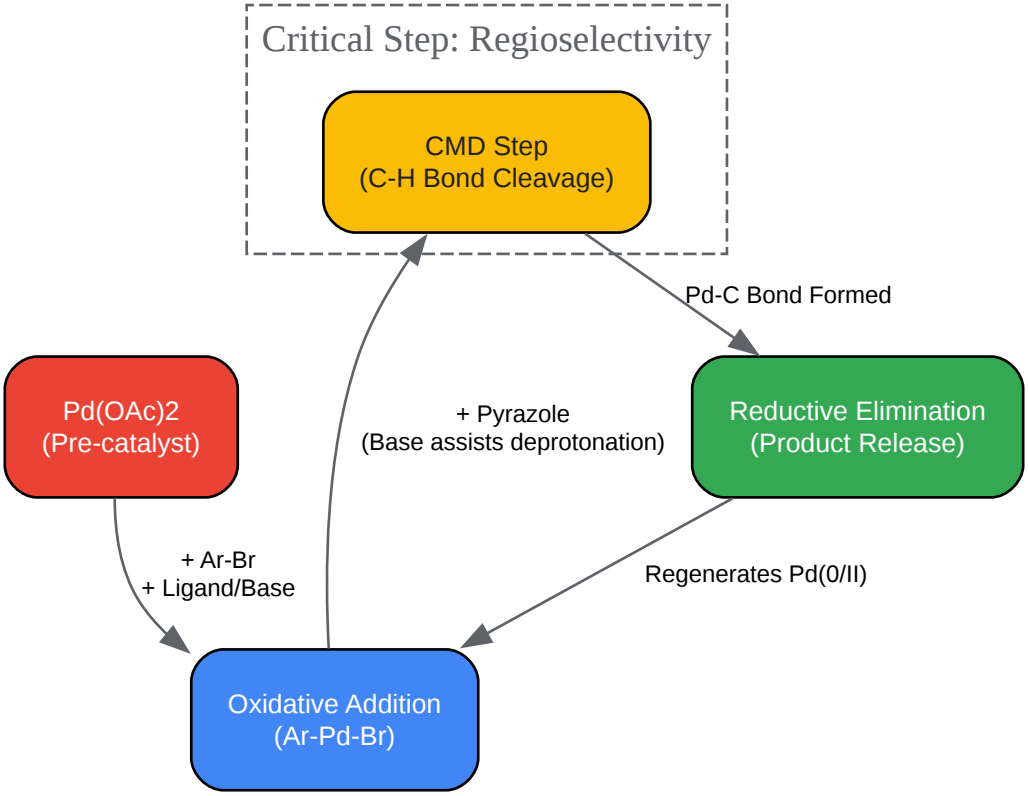

Click to download full resolution via product page

Figure 2: Simplified catalytic cycle for Pd-catalyzed C-H arylation via the CMD pathway.

References

- BenchChem. (2025). A Head-to-Head Comparison of Pyrazole Synthesis Routes for the Modern Researcher. BenchChem Guides. Link
- Comptes Rendus Chimie. (2025). Synthesis of C5-arylated pyrazoles from a pyrazole-4-carboxylate by a palladium-catalyzed C5–H bond activation. Académie des sciences. Link
- Journal of Organic Chemistry. (2024). Regioselective Synthesis of N-Aryl Pyrazoles from Alkenyl Sulfoxonium Ylides. ACS Publications.[2] Link

© 2026 BenchChem. All rights reserved.

- Organic & Biomolecular Chemistry. (2020). Transition-metal-catalyzed C–H functionalization of pyrazoles. RSC Publishing.[3][4] Link
- Green Chemistry. (2011). “On water” synthesis of N-unsubstituted pyrazoles. RSC Publishing.[3][4] Link

Need Custom Synthesis?

BenchChem offers custom synthesis for rare earth carbides and specific isotopiclabeling.

Email: info@benchchem.com or Request Quote Online.

Sources

- 1. Synthesis of C5-arylated pyrazoles from a pyrazole-4-carboxylate by a palladium-catalyzed C5–H bond activation/C4-decarboxylation sequence [comptes-rendus.academie-sciences.fr]
- 2. pubs.acs.org [pubs.acs.org]
- 3. Sequential regioselective arylation of pyrazolones with diaryliodonium salts - Organic & Biomolecular Chemistry (RSC Publishing) [pubs.rsc.org]
- 4. A robust protocol for Pd(ii)-catalyzed C-3 arylation of (1H) indazoles and pyrazoles: total synthesis of nigellidine hydrobromide - Chemical Science (RSC Publishing) [pubs.rsc.org]
- To cite this document: BenchChem. [Comparative Guide: Synthesis Routes for Functionalized Pyrazoles]. BenchChem, [2026]. [Online PDF]. Available at: [https://www.benchchem.com/product/b10964343#comparing-synthesis-routes-for-functionalized-pyrazoles]

Disclaimer & Data Validity:

The information provided in this document is for Research Use Only (RUO) and is strictly not intended for diagnostic or therapeutic procedures. While BenchChem strives to provide accurate protocols, we make no warranties, express or implied, regarding the fitness of this product for every specific experimental setup.

Technical Support: The protocols provided are for reference purposes. Unsure if this reagent suits your experiment? [Contact our Ph.D. Support Team for a compatibility check]

© 2026 BenchChem. All rights reserved.

Need Industrial/Bulk Grade? Request Custom Synthesis Quote

BenchChem

Our mission is to be the trusted global source of essential and advanced chemicals, empowering scientists and researchers to drive progress in science and industry.

Contact

Address: 3281 E Guasti Rd

Ontario, CA 91761, United States

Phone: (601) 213-4426

Email: info@benchchem.com

© 2026 BenchChem. All rights reserved.