An In-depth Technical Guide to the Immunogenicity of the OVA-T4 Peptide

Author: BenchChem Technical Support Team. **Date**: April 2026

Compound of Interest

Compound Name: *OVA-T4 Peptide*

Cat. No.: *B10861764*

Get Quote

Audience: Researchers, scientists, and drug development professionals.

Core Content: This guide provides a detailed examination of the **OVA-T4 peptide**, a crucial tool in immunological research. It outlines the fundamental signaling pathways, comprehensive experimental protocols for assessing immunogenicity, and a structured overview of the quantitative data used to characterize its activity.

Introduction to the OVA-T4 Peptide

The **OVA-T4 peptide**, with the amino acid sequence SIITFEKL, is a well-characterized variant of the immunodominant ovalbumin (OVA) peptide OVA(257-264), which has the sequence SIINFEKL[1][2]. The parent SIINFEKL peptide is a classic Major Histocompatibility Complex (MHC) class I-restricted epitope presented by the H-2Kb molecule in mice[2][3]. It is recognized by CD8+ T-cells from OT-I transgenic mice, making it a cornerstone model antigen for studying cytotoxic T-lymphocyte (CTL) responses.

The T4 variant, created by substituting asparagine (N) at position 4 with threonine (T), acts as an altered peptide ligand (APL). Such APLs are invaluable for dissecting the intricacies of T-cell activation. The **OVA-T4 peptide** is specifically described as having a "medium affinity" for the OT-1 T-cell receptor (TCR), in contrast to the high affinity of the original SIINFEKL peptide[1].

© 2026 BenchChem. All rights reserved.

This property allows researchers to investigate how variations in TCR-pMHC (peptide-MHC) binding affinity translate into downstream signaling events and functional T-cell outcomes.

Core Signaling Pathway: MHC Class I Presentation and CD8+ T-Cell Activation

The immunogenicity of the **OVA-T4 peptide** is predicated on its ability to be presented by MHC class I molecules on the surface of an Antigen Presenting Cell (APC) and subsequently recognized by a specific CD8+ T-cell.

- Antigen Processing: Endogenous proteins (or proteins from internalized pathogens) are degraded into short peptides by the proteasome in the cytoplasm.
- MHC Loading: These peptides are transported into the endoplasmic reticulum (ER) via the Transporter associated with Antigen Processing (TAP). Inside the ER, peptides like OVA-T4 are loaded onto newly synthesized MHC class I molecules (H-2Kb in this context).
- Surface Presentation: The stable peptide-MHC complex is then transported to the cell surface.
- T-Cell Recognition: A naive CD8+ T-cell with a cognate TCR (like the OT-I TCR) recognizes the specific OVA-T4/H-2Kb complex. This interaction is stabilized by the CD8 co-receptor binding to a non-polymorphic region of the MHC molecule.
- T-Cell Activation: Full T-cell activation requires two signals:
  - Signal 1: The primary signal from the TCR-pMHC interaction.
  - Signal 2: A co-stimulatory signal, typically from the interaction between CD28 on the T-cell and B7 molecules (CD80/CD86) on the APC.
- Clonal Expansion & Differentiation: Upon successful activation, the T-cell undergoes rapid proliferation (clonal expansion) and differentiates into effector cytotoxic T-lymphocytes (CTLs) and memory T-cells.

© 2026 BenchChem. All rights reserved.

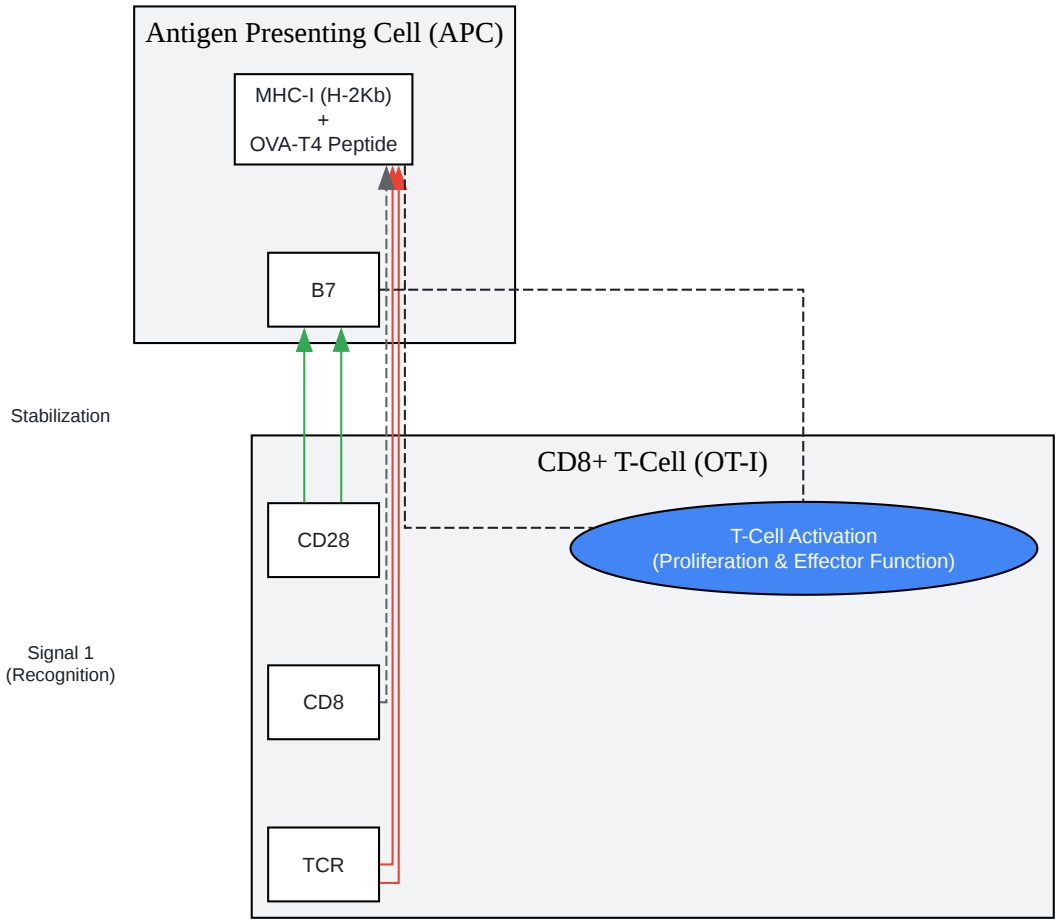

Click to download full resolution via product page

Caption: MHC Class I presentation of **OVA-T4 peptide** to a CD8+ T-cell.

Experimental Protocols for Assessing Immunogenicity

Evaluating the immunogenicity of the **OVA-T4 peptide** involves a series of established in vitro and in vivo assays. The general workflow involves preparing APCs, stimulating T-cells, and measuring the response.

© 2026 BenchChem. All rights reserved.

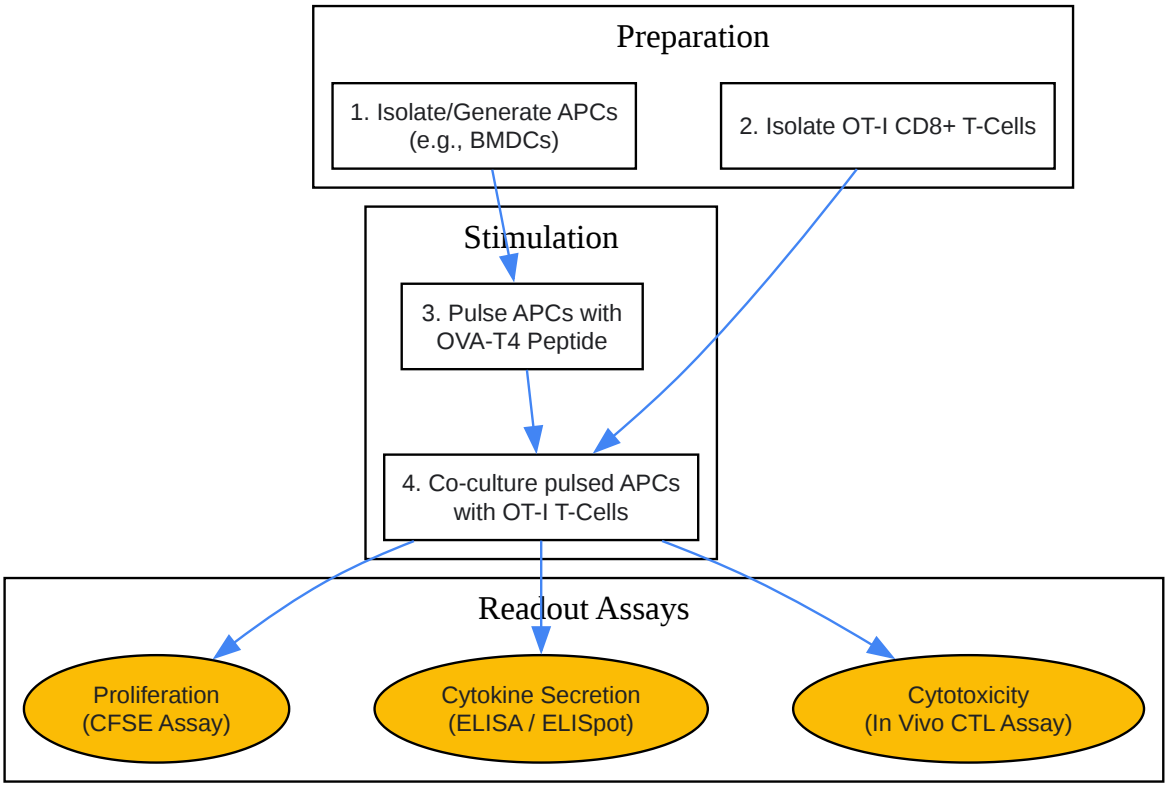

Click to download full resolution via product page

Caption: General experimental workflow for assessing peptide immunogenicity.

Protocol: In Vitro T-Cell Proliferation and Cytokine Analysis

This protocol, adapted from established methods, measures the ability of OVA-T4 to induce T-cell expansion and cytokine production in a controlled environment.

I. Generation of Bone Marrow-Derived Dendritic Cells (BMDCs)

- Harvest bone marrow from the femurs and tibias of C57BL/6 mice.
- Culture the cells in RPMI-1640 medium supplemented with 10% FBS, penicillin/streptomycin, and 20 ng/mL of granulocyte-macrophage colony-stimulating factor (GM-CSF).

© 2026 BenchChem. All rights reserved.

- Culture for 7 days, replacing the medium every 2-3 days, to allow differentiation into immature BMDCs.

II. T-Cell Isolation and Labeling

- Isolate CD8+ T-cells from the spleens and lymph nodes of OT-I transgenic mice using a magnetic-activated cell sorting (MACS) negative selection kit.
- To measure proliferation, label the purified T-cells with Carboxyfluorescein succinimidyl ester (CFSE) at a final concentration of 2.5-5 µM.

III. Co-culture and Stimulation

- Harvest the differentiated BMDCs and plate them in a 96-well plate.
- Pulse the BMDCs with varying concentrations of the **OVA-T4 peptide** (e.g., 0.01 to 10 µg/mL) for 4-6 hours at 37°C. Include SIINFEKL as a positive control and a no-peptide condition as a negative control.
- Add the CFSE-labeled OT-I CD8+ T-cells to the wells containing the peptide-pulsed BMDCs at a typical ratio of 10:1 (T-cell:BMDC).
- Co-culture for 66-72 hours at 37°C and 5% CO2.

IV. Analysis

- Proliferation: Harvest the cells and analyze by flow cytometry. Proliferating T-cells will have diluted the CFSE dye, showing reduced fluorescence intensity. Data is analyzed to determine the percentage of divided cells or a proliferation index.
- Cytokine Analysis:
  - ELISA/CBA: Collect the culture supernatant before harvesting cells and measure the concentration of secreted cytokines like IFN-γ and IL-2 using an Enzyme-Linked Immunosorbent Assay (ELISA) or a Cytometric Bead Array (CBA).
  - ELISpot: Use an ELISpot assay to quantify the number of IFN-γ secreting cells. This is performed in a separate plate where T-cells are cultured with pulsed APCs on an antibody-

© 2026 BenchChem. All rights reserved.

coated membrane.

Protocol: In Vivo Cytotoxicity (CTL) Assay

This protocol assesses the peptide's ability to prime a functional cytotoxic T-cell response in a living animal.

- Immunization: Immunize C57BL/6 mice with the **OVA-T4 peptide**, typically formulated with an adjuvant (e.g., CpG oligodeoxynucleotides).
- Target Cell Preparation:
  - Isolate splenocytes from naive C57BL/6 mice.
  - Divide the splenocyte population into two halves.
  - Pulse one half (the target population) with a high concentration of the **OVA-T4 peptide** (e.g., 10 µg/mL).
  - Leave the second half (the control population) unpulsed.
- Fluorescent Labeling:
  - Label the peptide-pulsed target population with a high concentration of CFSE (CFSEhigh).
  - Label the unpulsed control population with a low concentration of CFSE (CFSElow).
- Adoptive Transfer: Mix the CFSEhigh and CFSElow populations at a 1:1 ratio and inject them intravenously into the previously immunized mice.
- Analysis: After 18-24 hours, harvest the spleens from the recipient mice and analyze the cell populations by flow cytometry.
- Calculation: The percentage of specific lysis is calculated by comparing the ratio of CFSEhigh to CFSElow cells in immunized versus non-immunized control mice. A reduction in the CFSEhigh population indicates specific killing by CTLs primed by the peptide immunization.

© 2026 BenchChem. All rights reserved.

Quantitative Data Presentation

Direct side-by-side quantitative comparisons of the immunogenicity of OVA-T4 (SIITFEKL) versus the parent SIINFEKL peptide are not readily available in tabular format within the surveyed literature. However, studies consistently characterize OVA-T4 as a "medium affinity" ligand that elicits a weaker signaling response compared to the high-affinity SIINFEKL agonist.

The following table summarizes the key quantitative metrics used in the field to evaluate and compare the immunogenicity of such peptides.

© 2026 BenchChem. All rights reserved.

Assay Type	Metric	Unit of Measurement	Significance & Interpretation
Binding Affinity	Dissociation Constant (KD)	Molar (e.g., µM, nM)	Measures the physical binding strength between the TCR and the pMHC complex. A lower KD indicates higher affinity.
In Vitro Proliferation	Proliferation Index / % Divided Cells	Dimensionless / Percentage (%)	Quantifies the extent of T-cell clonal expansion. A higher value indicates stronger stimulation.
ELISpot	Spot-Forming Units (SFU)	SFU per 106 cells	Measures the frequency of cells actively secreting a specific cytokine (e.g., IFN-γ). Correlates with the magnitude of the T-cell response.
ELISA / CBA	Cytokine Concentration	pg/mL or ng/mL	Measures the total amount of a specific cytokine in the culture supernatant, reflecting the overall intensity of the immune response.
In Vivo CTL Assay	Percent Specific Lysis	Percentage (%)	Measures the functional cytotoxic capacity of the primed T-cell population in a living organism. A higher percentage indicates a more potent CTL response.

© 2026 BenchChem. All rights reserved.

Dose-Response Curve	Effective Concentration 50 (EC50)	Molar or µg/mL	The peptide concentration required to elicit 50% of the maximal response (e.g., proliferation or cytokine release). A lower EC50 indicates higher potency.

Need Custom Synthesis?

BenchChem offers custom synthesis for rare earth carbides and specific isotopiclabeling.

Email: info@benchchem.com or Request Quote Online.

References

- 1. Ovalbumin antigen-specific activation of human T cell receptor closely resembles soluble antibody stimulation as revealed by BOOST phosphotyrosine proteomics - PMC [pmc.ncbi.nlm.nih.gov]
- 2. medchemexpress.com [medchemexpress.com]
- 3. invivogen.com [invivogen.com]
- To cite this document: BenchChem. [An In-depth Technical Guide to the Immunogenicity of the OVA-T4 Peptide]. BenchChem, [2026]. [Online PDF]. Available at: [https://www.benchchem.com/product/b10861764/docs#an-in-depth-technical-guide-to-the-immunogenicity-of-the-ova-t4-peptide]

Disclaimer & Data Validity:

The information provided in this document is for Research Use Only (RUO) and is strictly not intended for diagnostic or therapeutic procedures. While BenchChem strives to provide accurate protocols, we make no warranties, express or implied, regarding the fitness of this product for every specific experimental setup.

© 2026 BenchChem. All rights reserved.

Technical Support: The protocols provided are for reference purposes. Unsure if this reagent suits your experiment?

Need Industrial/Bulk Grade? Request Custom Synthesis Quote

BenchChem

Our mission is to be the trusted global source of essential and advanced chemicals, empowering scientists and researchers to drive progress in science and industry.

Contact

Address: 3281 E Guasti Rd

Ontario, CA 91761, United States

Phone: (601) 213-4426

Email: info@benchchem.com

Contact our Ph.D. Support Team for a compatibility check

© 2026 BenchChem. All rights reserved.