Potential off-target effects of Milciclib Maleate in research

Author: BenchChem Technical Support Team. **Date**: April 2026

Compound of Interest	
Compound Name:	*Milciclib Maleate*
CAS No.:	*1253645-38-3*
Cat. No.:	*B10860112*

Get Quote

Technical Support Center: Milciclib Maleate

Welcome to the technical support center for **Milciclib Maleate**. This resource is designed to assist researchers, scientists, and drug development professionals in understanding and mitigating the potential off-target effects of this multi-kinase inhibitor during their experiments.

Frequently Asked Questions (FAQs)

Q1: What are the primary and known off-targets of **Milciclib Maleate**?

A1: **Milciclib Maleate** is a potent, ATP-competitive inhibitor primarily targeting multiple cyclin-dependent kinases (CDKs) and Tropomyosin receptor kinase A (TrkA).[1][2] Its primary targets include CDK2, CDK1, CDK4, CDK5, and CDK7.[1][3][4] Additionally, it has demonstrated activity against other kinases, indicating a broader selectivity profile. Known off-targets with inhibitory concentrations in the sub-micromolar range include TrkB, TrkC, c-Kit, Abl, and Platelet-Derived Growth Factor Receptor (PDGFR).[5] Milciclib is also a potent binder to the pseudokinase ULK4.[5]

© 2026 BenchChem. All rights reserved.

Q2: How can I interpret unexpected phenotypic results in my cell-based assays with **Milciclib Maleate**?

A2: Unexpected cellular phenotypes when using **Milciclib Maleate** can often be attributed to its multi-kinase inhibitory nature. The observed effect may not be solely due to the inhibition of the primary target you are investigating. For instance, while you may be studying its effect on the cell cycle through CDK inhibition, concurrent inhibition of TrkA or other off-target kinases could influence signaling pathways related to cell survival, proliferation, or morphology.[6] It is crucial to consider the contribution of all known targets, especially at higher concentrations of the inhibitor.

Q3: What is the recommended starting concentration for in vitro experiments to minimize off-target effects?

A3: To minimize off-target effects, it is advisable to start with a concentration range that is selective for the primary target of interest, if known for your specific research question. A common practice is to use a concentration that is 5 to 10 times higher than the IC50 or Ki value for the primary target.[7] However, given Milciclib's activity against multiple targets in a similar concentration range, achieving complete selectivity may be challenging. A dose-response experiment is highly recommended to distinguish between on-target and potential off-target effects.

Q4: Are there known issues with the solubility or stability of **Milciclib Maleate** in cell culture?

A4: **Milciclib Maleate** is soluble in DMSO.[1] For cell culture experiments, it is common to prepare a concentrated stock solution in DMSO and then dilute it in the culture medium to the desired final concentration. It is important to ensure that the final concentration of DMSO in the culture medium is low (typically <0.1%) to avoid solvent-induced cytotoxicity. Always use fresh DMSO, as moisture-absorbing DMSO can reduce the solubility of the compound.[1] For in vivo studies, specific formulations involving propylene glycol and Tween 80 have been used.[1]

Troubleshooting Guides

Issue 1: Inconsistent or non-reproducible results in cell viability assays.

- Potential Cause 1: Cell Cycle State. The inhibitory effect of CDK inhibitors like Milciclib can be highly dependent on the cell cycle phase of the cell population at the time of treatment.[8]
    - Troubleshooting Step: Synchronize your cells before treatment to ensure a more homogenous population. This can be achieved through methods like serum starvation or treatment with cell cycle-blocking agents.
- Potential Cause 2: Assay Endpoint. Different proliferation assays measure different cellular parameters (e.g., metabolic activity in MTT assays vs. DNA content).[9] Inhibition of CDKs can lead to cell cycle arrest without immediate cell death, which can be misinterpreted by certain assays.[9]
    - Troubleshooting Step: Use multiple, complementary assays to assess cell viability and proliferation. For example, combine a metabolic assay with a direct cell counting method or a DNA synthesis assay (e.g., BrdU incorporation).
- Potential Cause 3: Off-Target Effects. At higher concentrations, off-target kinase inhibition may lead to unexpected effects on cell viability.
    - Troubleshooting Step: Perform a careful dose-response analysis and correlate the observed phenotype with the known IC50 values for both primary and off-target kinases.

Issue 2: Observed phenotype does not correlate with the inhibition of the intended primary target.

- Potential Cause: Engagement of an Off-Target Kinase. The observed biological response may be a consequence of Milciclib engaging an alternative, more critical kinase in your experimental model.
    - Troubleshooting Step 1: Literature Review. Thoroughly review the literature for the expression and role of known Milciclib off-targets (e.g., Trk family, c-Kit, Abl, PDGFR) in your specific cell type or disease model.
    - Troubleshooting Step 2: Orthogonal Approaches. Use a more selective inhibitor for your primary target (if available) or employ genetic approaches like siRNA or CRISPR/Cas9 to knockdown the primary target and see if it phenocopies the effect of Milciclib.

© 2026 BenchChem. All rights reserved.

Data Presentation

Table 1: On-Target and Off-Target Inhibitory Activity of Milciclib Maleate (PHA-848125)

Target Kinase	IC50 (nM)	Notes
Primary Targets		
CDK2/cyclin A	45	Potent inhibition of a key cell cycle regulator.[2][3]
CDK1/cyclin B	398	Inhibition of the primary mitotic kinase.[1]
CDK4/cyclin D1	160	Inhibition of a key G1 phase regulator.[1]
CDK5/p35	265	Inhibition of a kinase with roles in neuronal function and cancer.[1]
CDK7/cyclin H	150	Inhibition of the CDK-activating kinase.[1]
TrkA	53	Potent inhibition of a neurotrophin receptor tyrosine kinase.[2][3]
Known Off-Targets		
TrkB/C	<1000	Cross-reactivity with other Trk family members.[5]
c-Kit	<1000	Inhibition of a receptor tyrosine kinase involved in hematopoiesis and cancer.[5]
Abl	<1000	Inhibition of a non-receptor tyrosine kinase.[5]
PDGFR	<1000	Inhibition of a receptor tyrosine kinase family.[5]
ULK4 (pseudokinase)	Ki = 4.4 µM	Potent binder to this pseudokinase.[5]

© 2026 BenchChem. All rights reserved.

Note: Milciclib has been evaluated against a panel of 38 additional kinases, though the complete public dataset is not available. The off-targets listed are those with reported sub-micromolar IC50 values.[2]

Experimental Protocols

Protocol 1: In Vitro Kinase Inhibition Assay

This protocol provides a general framework for assessing the inhibitory activity of **Milciclib Maleate** against a purified kinase in a biochemical assay.

Materials:

- Purified recombinant kinase of interest
- Specific peptide or protein substrate for the kinase
- **Milciclib Maleate** stock solution (in DMSO)
- Kinase reaction buffer (e.g., Tris-HCl, MgCl2, DTT)
- ATP solution
- [γ-33P]ATP (for radiometric assay) or ADP-Glo™ Kinase Assay kit (for luminescence-based assay)
- 96-well or 384-well plates
- Phosphocellulose paper or other capture membrane (for radiometric assay)
- Scintillation counter or luminescence plate reader

Procedure:

- Prepare Kinase Reaction Master Mix: In a microcentrifuge tube, prepare a master mix containing the kinase reaction buffer, the purified kinase, and its substrate.
- Serial Dilution of Inhibitor: Prepare a series of dilutions of the **Milciclib Maleate** stock solution in the kinase reaction buffer. Also, prepare a vehicle control (DMSO only).

© 2026 BenchChem. All rights reserved.

- Plate Inhibitor and Kinase: Add the diluted **Milciclib Maleate** or vehicle control to the wells of the microplate. Then, add the kinase reaction master mix to each well.
- Initiate Kinase Reaction: Start the kinase reaction by adding a mixture of cold ATP and [γ-33P]ATP (or just ATP for non-radiometric assays) to each well.
- Incubation: Incubate the plate at the optimal temperature for the kinase (e.g., 30°C) for a predetermined amount of time (e.g., 30-60 minutes).
- Stop Reaction and Detect Signal:
  - Radiometric Assay: Stop the reaction by adding a solution like phosphoric acid. Spot the reaction mixture onto phosphocellulose paper, wash unbound ATP, and measure the incorporated radioactivity using a scintillation counter.
  - Luminescence-Based Assay (e.g., ADP-Glo™): Follow the manufacturer's instructions to stop the kinase reaction and then add the detection reagents to measure the amount of ADP produced, which is correlated with kinase activity.
- Data Analysis: Calculate the percentage of kinase inhibition for each concentration of **Milciclib Maleate** compared to the vehicle control. Plot the percent inhibition against the logarithm of the inhibitor concentration and fit the data to a sigmoidal dose-response curve to determine the IC50 value.

Visualizations

© 2026 BenchChem. All rights reserved.

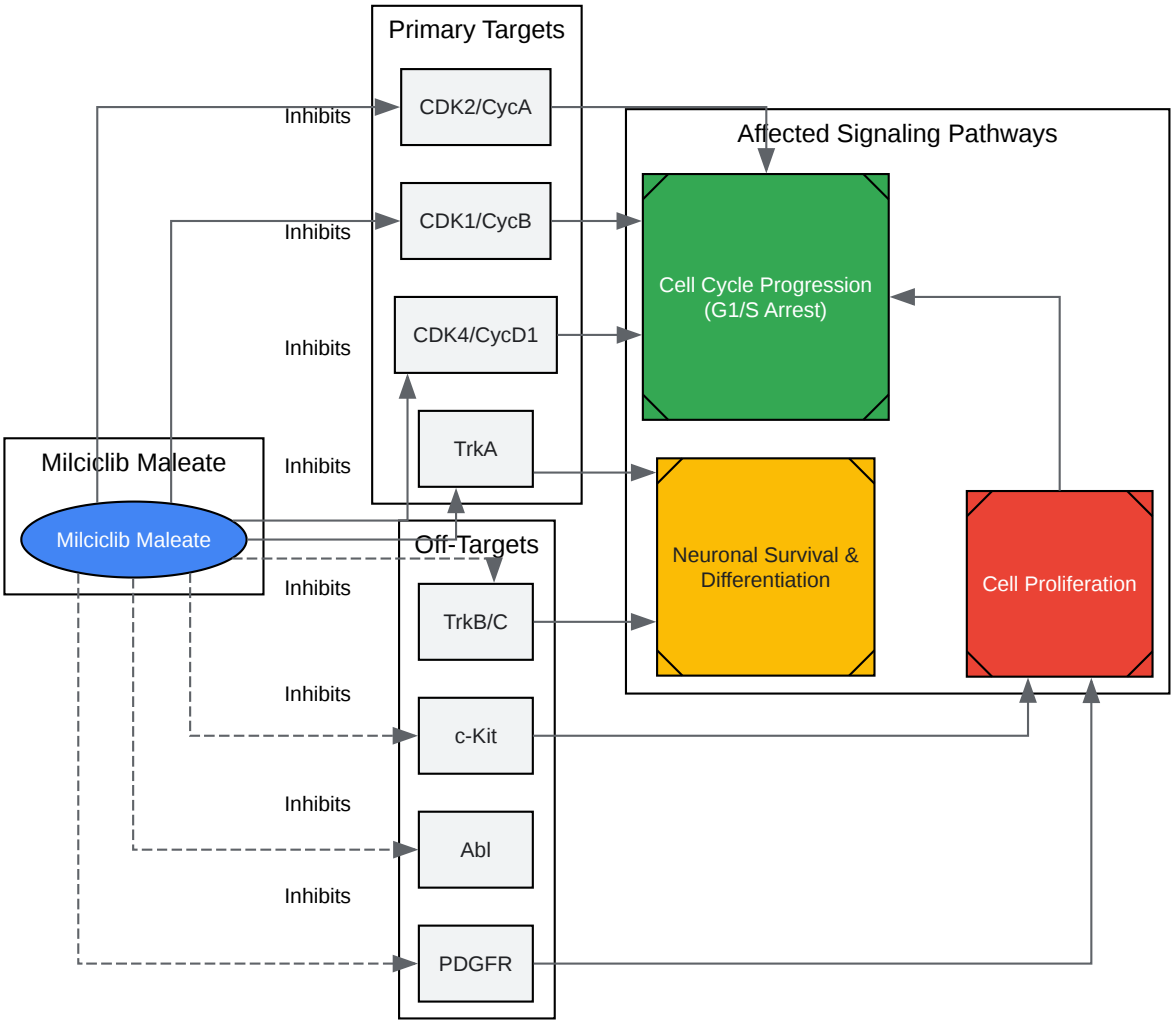

© 2026 BenchChem. All rights reserved.

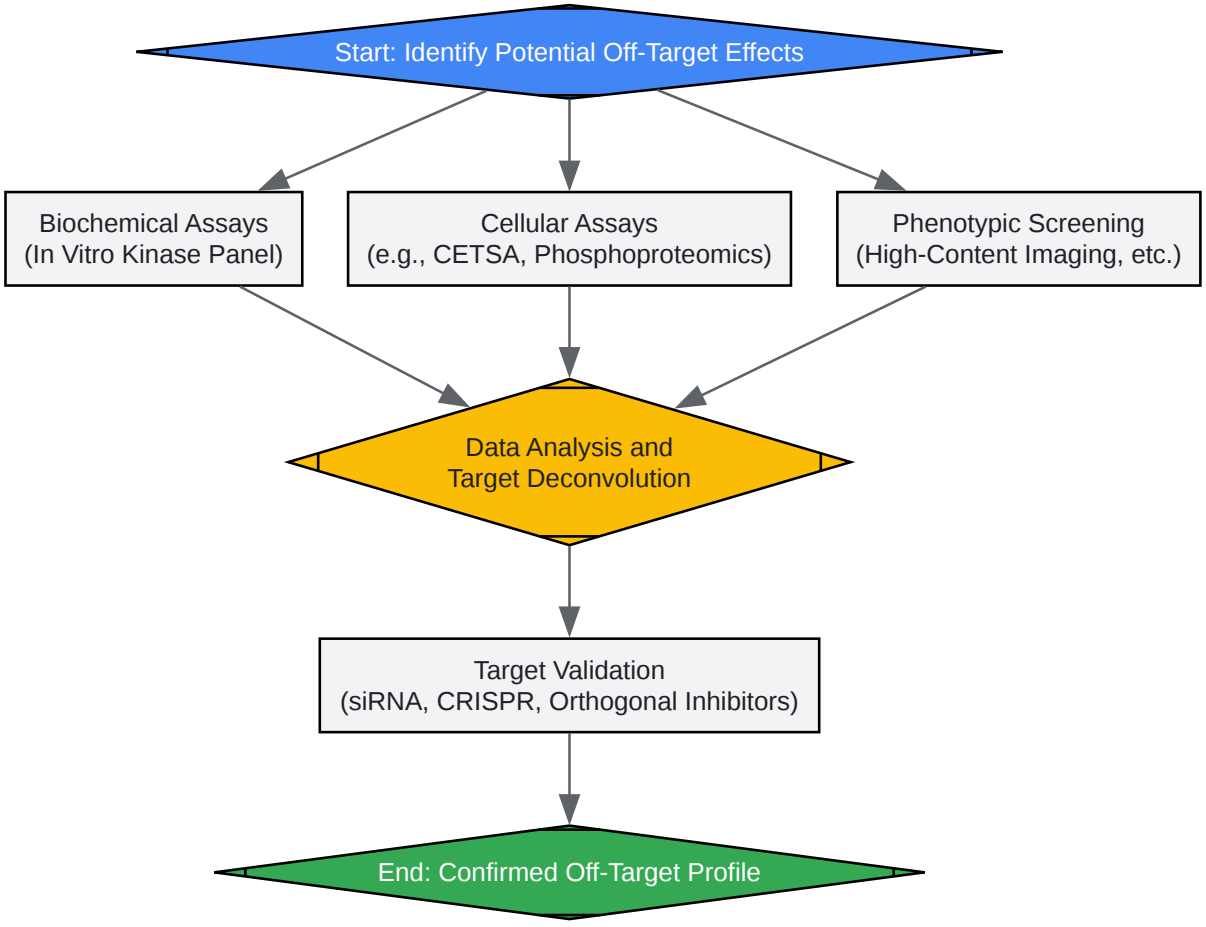

Click to download full resolution via product page

Need Custom Synthesis?

BenchChem offers custom synthesis for rare earth carbides and specific isotopiclabeling.

Email: info@benchchem.com or Request Quote Online.

References

- 1. medchemexpress.com [medchemexpress.com]
- 2. selleckchem.com [selleckchem.com]
- 3. Cyclin-Dependent Kinase Inhibitors as Marketed Anticancer Drugs: Where Are We Now? A Short Survey - PMC [pmc.ncbi.nlm.nih.gov]
- 4. tizianalifesciences.com [tizianalifesciences.com]

© 2026 BenchChem. All rights reserved.

- 5. Milciclib (PHA-848125) | CDK/TRK inhibitor | Probechem Biochemicals [probechem.com]
- 6. Kinase inhibitors can produce off-target effects and activate linked pathways by retroactivity - PMC [pmc.ncbi.nlm.nih.gov]
- 7. PHA-848125(Milciclib)|CDKA inhibitor|DC Chemicals [dcchemicals.com]
- 8. tandfonline.com [tandfonline.com]
- 9. researchgate.net [researchgate.net]
- To cite this document: BenchChem. [Potential off-target effects of Milciclib Maleate in research]. BenchChem, [2026]. [Online PDF]. Available at: [https://www.benchchem.com/product/b10860112/docs#potential-off-target-effects-of-milciclib-maleate-in-research]

Disclaimer & Data Validity:

The information provided in this document is for Research Use Only (RUO) and is strictly not intended for diagnostic or therapeutic procedures. While BenchChem strives to provide accurate protocols, we make no warranties, express or implied, regarding the fitness of this product for every specific experimental setup.

Technical Support: The protocols provided are for reference purposes. Unsure if this reagent suits your experiment?

Need Industrial/Bulk Grade? Request Custom Synthesis Quote

BenchChem

Our mission is to be the trusted global source of essential and advanced chemicals, empowering scientists and researchers to drive progress in science and industry.

Contact

Address: 3281 E Guasti Rd

Ontario, CA 91761, United States

Phone: (601) 213-4426

Email: info@benchchem.com

© 2026 BenchChem. All rights reserved.

Contact our Ph.D. Support Team for a compatibility check

© 2026 BenchChem. All rights reserved.