Application Notes and Protocols for Experimental Cell Culture Compound BCX-1898

Author: BenchChem Technical Support Team. **Date**: April 2026

Compound of Interest

Compound Name:	*BCX-1898*
Cat. No.:	*B10846939*

Get Quote

For Researchers, Scientists, and Drug Development Professionals

Disclaimer

Information regarding the experimental compound "**BCX-1898**" is not available in publicly accessible databases. The following application notes and protocols are generated based on standardized cell culture methodologies and will require significant adaptation and optimization once the specific characteristics of **BCX-1898** are understood. The provided information serves as a general framework and should not be considered a validated protocol for this specific compound.

Introduction

This document provides a foundational guide for initiating cell culture-based experiments with the novel compound **BCX-1898**. Due to the absence of specific data on **BCX-1898**, the protocols outlined below are based on general best practices for handling new chemical entities in a research setting. It is imperative for researchers to conduct thorough dose-response and cytotoxicity assays to establish appropriate working concentrations and to elucidate the compound's mechanism of action.

© 2026 BenchChem. All rights reserved.

Materials and Reagents

A comprehensive list of necessary materials and reagents for general cell culture and subsequent experimentation is provided below.

© 2026 BenchChem. All rights reserved.

Category	Item	Recommended Specifications
Cell Lines	To be determined based on the therapeutic target of BCX-1898	e.g., A549 (lung carcinoma), MCF-7 (breast cancer), HEK293 (human embryonic kidney), etc.
Base Media	DMEM, RPMI-1640, or other appropriate media	High glucose, with L-glutamine, without sodium pyruvate
Supplements	Fetal Bovine Serum (FBS)	10% (v/v), heat-inactivated
Penicillin-Streptomycin	100 U/mL penicillin, 100 µg/mL streptomycin	
L-Glutamine	2 mM	
Reagents	Trypsin-EDTA	0.25% Trypsin, 0.53 mM EDTA
Phosphate-Buffered Saline (PBS)	pH 7.4, sterile	
Dimethyl Sulfoxide (DMSO)	Cell culture grade, for stock solution preparation	
BCX-1898	Purity >98%	
Consumables	Cell culture flasks (T-25, T-75)	Sterile, tissue culture treated
Cell culture plates (6-well, 24-well, 96-well)	Sterile, tissue culture treated	
Serological pipettes (5 mL, 10 mL, 25 mL)	Sterile, individually wrapped	
Pipette tips (p20, p200, p1000)	Sterile, filtered	
Centrifuge tubes (15 mL, 50 mL)	Sterile	
Cryovials	Sterile	

© 2026 BenchChem. All rights reserved.

Equipment	Biosafety cabinet (Class II)
CO2 incubator	37°C, 5% CO2
Inverted microscope	
Centrifuge	
Water bath	37°C
Hemocytometer or automated cell counter	
-80°C freezer and liquid nitrogen dewar	For long-term storage

Experimental Protocols

The following protocols provide a starting point for the in vitro evaluation of **BCX-1898**.

Preparation of **BCX-1898** Stock Solution

A high-concentration stock solution is essential for accurate and reproducible dosing.

- Determine Solubility: Test the solubility of **BCX-1898** in various cell culture-grade solvents (e.g., DMSO, ethanol).
- Weigh Compound: Accurately weigh a precise amount of **BCX-1898** powder in a sterile microcentrifuge tube.
- Dissolve: Add the appropriate volume of the chosen solvent (e.g., DMSO) to achieve a high-concentration stock (e.g., 10 mM).
- Vortex: Vortex thoroughly until the compound is completely dissolved.
- Sterilize: Filter-sterilize the stock solution through a 0.22 µm syringe filter into a new sterile tube.
- Aliquot and Store: Aliquot the stock solution into smaller volumes to avoid repeated freeze-thaw cycles and store at -20°C or -80°C, protected from light.

© 2026 BenchChem. All rights reserved.

General Cell Culture Maintenance

Standard procedures for maintaining healthy cell cultures are critical for reliable experimental outcomes.

- Thawing Cryopreserved Cells:
  - Rapidly thaw the vial of cells in a 37°C water bath.
  - Transfer the cell suspension to a 15 mL centrifuge tube containing 9 mL of pre-warmed complete growth medium.
  - Centrifuge at 200 x g for 5 minutes to pellet the cells.
  - Discard the supernatant and resuspend the cell pellet in fresh complete growth medium.
  - Transfer the cell suspension to an appropriate-sized culture flask.
  - Incubate at 37°C in a 5% CO2 incubator.
- Subculturing (Passaging) Adherent Cells:
  - Aspirate the old medium from the flask.
  - Wash the cell monolayer once with sterile PBS.
  - Add a sufficient volume of pre-warmed Trypsin-EDTA to cover the cell monolayer.
  - Incubate for 2-5 minutes at 37°C, or until cells detach.
  - Add complete growth medium to inactivate the trypsin.
  - Collect the cell suspension and centrifuge at 200 x g for 5 minutes.
  - Resuspend the cell pellet in fresh complete growth medium and plate into new flasks at the desired seeding density.

Cytotoxicity Assay (MTT or similar)

© 2026 BenchChem. All rights reserved.

This assay is crucial for determining the concentration range of **BCX-1898** that affects cell viability.

- Cell Seeding: Seed cells into a 96-well plate at a predetermined density (e.g., 5,000-10,000 cells/well) and allow them to adhere overnight.
- Compound Treatment: Prepare serial dilutions of **BCX-1898** in complete growth medium. The final solvent concentration should be consistent across all wells and should not exceed 0.5%.
- Incubation: Aspirate the old medium and add the medium containing the different concentrations of **BCX-1898** to the respective wells. Include vehicle control (medium with solvent only) and untreated control wells. Incubate for 24, 48, or 72 hours.
- MTT Addition: Add MTT reagent to each well and incubate for 2-4 hours at 37°C.
- Formazan Solubilization: Add solubilization solution (e.g., DMSO or a specialized reagent) to each well and mix thoroughly.
- Absorbance Reading: Read the absorbance at the appropriate wavelength (e.g., 570 nm) using a microplate reader.
- Data Analysis: Calculate the percentage of cell viability relative to the untreated control and plot a dose-response curve to determine the IC50 value (the concentration at which 50% of cell growth is inhibited).

Visualizations

The following diagrams illustrate generalized workflows and hypothetical signaling pathways that may be relevant for studying a novel compound like **BCX-1898**.

© 2026 BenchChem. All rights reserved.

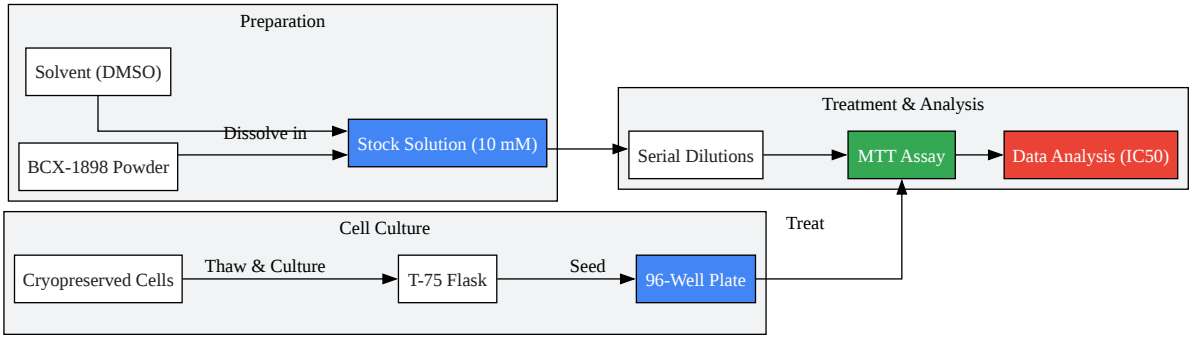

Click to download full resolution via product page

Caption: General workflow for determining the IC50 value of **BCX-1898**.

© 2026 BenchChem. All rights reserved.

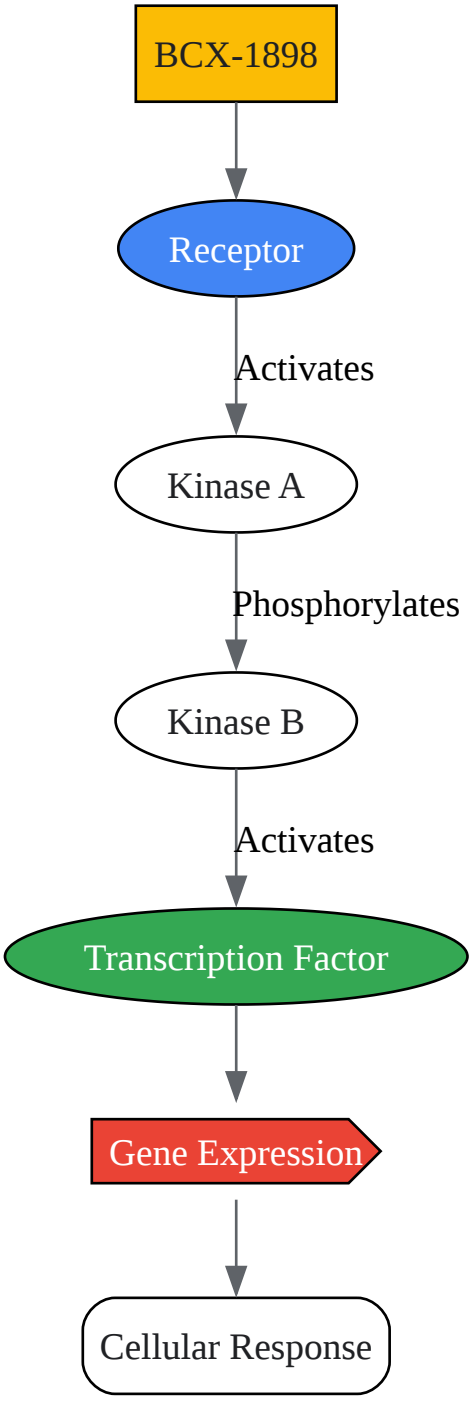

Click to download full resolution via product page

Caption: Hypothetical signaling pathway potentially modulated by **BCX-1898**.

Further Investigations

© 2026 BenchChem. All rights reserved.

Once the cytotoxic profile of **BCX-1898** is established, further experiments can be designed to elucidate its mechanism of action. These may include:

- Apoptosis Assays: (e.g., Annexin V/PI staining, caspase activity assays) to determine if cell death is occurring via apoptosis.
- Cell Cycle Analysis: (e.g., Propidium iodide staining followed by flow cytometry) to investigate effects on cell cycle progression.
- Western Blotting: To analyze the expression and phosphorylation status of key proteins in relevant signaling pathways.
- Gene Expression Analysis: (e.g., qPCR, RNA-seq) to identify transcriptional changes induced by **BCX-1898**.

It is critical to reiterate that these are generalized protocols. The specific cell lines, media, and experimental conditions must be carefully chosen and optimized based on the intended application and emerging data for **BCX-1898**.

- To cite this document: BenchChem. [Application Notes and Protocols for Experimental Cell Culture Compound BCX-1898]. BenchChem, [2026]. [Online PDF]. Available at: [https://www.benchchem.com/product/b10846939/docs#application-notes-and-protocols-for-experimental-cell-culture-compound-bcx-1898]

Disclaimer & Data Validity:

The information provided in this document is for Research Use Only (RUO) and is strictly not intended for diagnostic or therapeutic procedures. While BenchChem strives to provide accurate protocols, we make no warranties, express or implied, regarding the fitness of this product for every specific experimental setup.

Technical Support: The protocols provided are for reference purposes. Unsure if this reagent suits your experiment?

Need Industrial/Bulk Grade? Request Custom Synthesis Quote

© 2026 BenchChem. All rights reserved.

BenchChem

Our mission is to be the trusted global source of essential and advanced chemicals, empowering scientists and researchers to drive progress in science and industry.

Contact

Address: 3281 E Guasti Rd

Ontario, CA 91761, United States

Phone: (601) 213-4426

Email: info@benchchem.com

Contact our Ph.D. Support Team for a compatibility check

© 2026 BenchChem. All rights reserved.