Technical Support Center: In Vivo Experiments with AC1-IN-1

Author: BenchChem Technical Support Team. **Date**: April 2026

Compound of Interest

Compound Name: *AC1-IN-1*

Cat. No.: *B10831455*

Get Quote

This technical support center provides troubleshooting guidance and frequently asked questions (FAQs) for researchers utilizing **AC1-IN-1** in in vivo experiments. The information is tailored for scientists and drug development professionals working with this novel adenylyl cyclase 1 (AC1) inhibitor.

Frequently Asked Questions (FAQs)

Q1: What is the mechanism of action for **AC1-IN-1**?

A1: **AC1-IN-1** is a selective inhibitor of adenylyl cyclase type 1 (AC1). AC1 is a key enzyme in the cyclic AMP (cAMP) signaling pathway and is predominantly expressed in neurons.[1] It is a calcium/calmodulin-stimulated enzyme involved in synaptic plasticity, pain perception, and opioid dependence.[2][3] By inhibiting AC1, **AC1-IN-1** is expected to reduce cAMP production in specific neuronal populations, thereby modulating downstream signaling pathways associated with pain and other neurological processes.[4][5]

Q2: What are the potential therapeutic applications of **AC1-IN-1**?

A2: Based on preclinical studies with similar AC1 inhibitors like NB001 and ST034307, **AC1-IN-1** has potential therapeutic applications in the treatment of chronic pain, including neuropathic

© 2026 BenchChem. All rights reserved.

and inflammatory pain.[1][3][6][7] Additionally, due to AC1's role in opioid-induced signaling, **AC1-IN-1** may have applications in reducing opioid tolerance and dependence.[2][8]

Q3: What is the recommended route of administration for **AC1-IN-1** in mice?

A3: Similar AC1 inhibitors have been successfully administered in mice via oral (p.o.), intraperitoneal (i.p.), and intrathecal (i.t.) routes.[1][3][7] The choice of administration route will depend on the experimental design and the desired systemic or localized exposure. Oral and intraperitoneal routes are suitable for assessing systemic analgesic effects, while intrathecal administration can be used to target the spinal cord directly.[1]

Q4: How should I prepare **AC1-IN-1** for in vivo administration?

A4: As **AC1-IN-1** is likely a hydrophobic small molecule, careful formulation is critical for its bioavailability and efficacy. For oral administration, it can be dissolved in saline.[7] For intraperitoneal or subcutaneous injections, if solubility in aqueous solutions is low, a vehicle containing a solubilizing agent may be necessary. Common vehicles for hydrophobic compounds include:

- A mixture of DMSO and PBS. It is crucial to keep the final DMSO concentration low (typically <5% v/v) to avoid toxicity.
- Corn oil for hydrophobic molecules.[9]
- A combination of solvents like 20% N,N-Dimethylacetamide (DMA), 40% Propylene glycol (PG), and 40% Polyethylene Glycol (PEG-400) (DPP) has been used for intravenous administration of poorly soluble compounds.[10]

It is recommended to perform small-scale solubility tests to determine the optimal vehicle for **AC1-IN-1**.

Q5: What are the expected analgesic effects of **AC1-IN-1** in rodent pain models?

A5: In models of inflammatory and neuropathic pain, administration of AC1 inhibitors has been shown to produce a significant analgesic effect, reducing mechanical allodynia and hyperalgesia.[3][7] The onset of action for a similar compound, NB001, administered orally at

© 2026 BenchChem. All rights reserved.

10 mg/kg was observed at 45 minutes, with the effect lasting for at least 2 hours.[3] The analgesic effect is often dose-dependent.[3][6]

Troubleshooting Guide

© 2026 BenchChem. All rights reserved.

Issue	Potential Cause	Troubleshooting Steps
Lack of Efficacy (No Analgesic Effect)	Poor Bioavailability: The compound is not reaching the target tissue at a sufficient concentration.	- Optimize Formulation: Test different vehicles to improve solubility and absorption.[9] For hydrophobic compounds, consider formulations with co-solvents or lipids.[11][12] - Increase Dose: Perform a dose-response study to determine the optimal effective dose.[3][6] - Change Administration Route: If oral administration is ineffective, try intraperitoneal or subcutaneous injection to bypass first-pass metabolism. For CNS targets, consider intrathecal or intracerebroventricular administration for direct delivery.[1] - Check Compound Stability: Ensure the compound is stable in the formulation and under storage conditions.
Inappropriate Timing of Administration: The compound's pharmacokinetic profile (Tmax) may not align with the timing of the behavioral test.	- Pharmacokinetic Study: If possible, perform a basic pharmacokinetic study to determine the time to maximum plasma concentration (Tmax).[13] - Stagger Dosing and Testing Times: Test different time points between drug administration and behavioral assessment.[3]	

© 2026 BenchChem. All rights reserved.

Incorrect Animal Model: The chosen pain model may not be appropriate for the mechanism of action of AC1-IN-1.	- Review Literature: Ensure the selected animal model is sensitive to modulation of the cAMP pathway.[14][15] - Use Positive Controls: Include a known analgesic compound as a positive control to validate the experimental setup.	
High Variability in Results	Inconsistent Drug Administration: Inaccurate dosing or inconsistent administration technique.	- Standardize Procedures: Ensure all personnel are trained and follow a standardized protocol for drug formulation and administration. - Accurate Dosing: Use precise weighing and dilution techniques. Administer volume based on individual animal weight.
Animal-to-Animal Variability: Differences in metabolism, genetics, or stress levels among animals.	- Increase Sample Size: A larger number of animals per group can help to overcome individual variability. - Acclimatize Animals: Ensure animals are properly acclimatized to the housing and experimental conditions to reduce stress. - Use Genetically Homogeneous Strains: Using inbred strains of mice can reduce genetic variability.	
Subjectivity in Behavioral Scoring: Inconsistent scoring of pain behaviors.	- Blinding: The experimenter scoring the behavior should be blind to the treatment groups. - Standardized Scoring Criteria: Use clear and objective criteria	

© 2026 BenchChem. All rights reserved.

	for scoring pain-related behaviors.	
Unexpected Side Effects (e.g., Sedation, Motor Impairment)	Off-Target Effects: The compound may be interacting with other targets besides AC1.	- Selectivity Profiling: If not already done, perform in vitro profiling against a panel of receptors and enzymes to assess selectivity. - Dose Reduction: Determine if the side effects are dose-dependent and if an effective dose with a better safety profile can be identified.
Vehicle Toxicity: The vehicle used for formulation may be causing adverse effects.	- Vehicle Control Group: Always include a vehicle-only control group to assess the effects of the vehicle itself.[9] - Test Alternative Vehicles: If the vehicle is suspected to be the cause, test alternative, well-tolerated vehicles.	
Central Nervous System (CNS) Penetration Issues: Poor blood-brain barrier penetration can lead to a lack of central effects or a focus on peripheral effects.	- Assess Brain Penetration: If technically feasible, measure the brain-to-plasma concentration ratio of AC1-IN-1.[16][17] - Consider Peripheral vs. Central Action: Design experiments to differentiate between peripheral and central mechanisms of action (e.g., comparing systemic vs. local administration).	

Experimental Protocols

© 2026 BenchChem. All rights reserved.

Oral Administration of **AC1-IN-1** in a Mouse Model of Neuropathic Pain

This protocol is adapted from studies using the AC1 inhibitor NB001.[3][6]

- Animal Model: Chronic constriction injury (CCI) or spared nerve injury (SNI) model in adult mice.
- Compound Preparation:
  - Dissolve **AC1-IN-1** in sterile 0.9% saline to the desired concentration (e.g., for a 10 mg/kg dose in a 25g mouse, prepare a 2.5 mg/mL solution to administer 0.1 mL).
  - If solubility is an issue, prepare a suspension in a vehicle such as 0.5% carboxymethylcellulose (CMC) in water.
  - Prepare fresh on the day of the experiment.
- Administration:
  - Gently restrain the mouse.
  - Administer the **AC1-IN-1** solution or suspension orally using a gavage needle. The volume should be based on the animal's body weight (typically 5-10 mL/kg).
- Behavioral Testing:
  - Assess mechanical allodynia using von Frey filaments at baseline (before drug administration) and at various time points after administration (e.g., 45 minutes, 2 hours, 4 hours).[3]
  - The experimenter should be blinded to the treatment groups.
- Control Groups:
  - Vehicle control group receiving the same volume of saline or vehicle without the drug.
  - Positive control group receiving a known analgesic (e.g., gabapentin).

© 2026 BenchChem. All rights reserved.

Intraperitoneal Administration of **AC1-IN-1** in a Mouse Model of Inflammatory Pain

This protocol is based on studies with the AC1 inhibitor NB001.[7]

- Animal Model: Complete Freund's Adjuvant (CFA)-induced inflammatory pain model in adult mice.
- Compound Preparation:
  - Dissolve **AC1-IN-1** in a suitable vehicle. A common vehicle is a solution of 5% DMSO, 5% Tween 80, and 90% saline.
  - Vortex thoroughly to ensure complete dissolution.
- Administration:
  - Gently restrain the mouse.
  - Inject the **AC1-IN-1** solution intraperitoneally. The injection volume should be based on the animal's body weight (typically 10 mL/kg).
- Behavioral Testing:
  - Measure paw withdrawal threshold to a mechanical stimulus (e.g., using an electronic von Frey apparatus) at baseline and at specified time points post-injection.
- Control Groups:
  - Vehicle control group.
  - Sham group (no inflammation induction).
  - Positive control group (e.g., morphine or a non-steroidal anti-inflammatory drug).

Quantitative Data Summary

Table 1: In Vivo Dosing of AC1 Inhibitors in Mice

© 2026 BenchChem. All rights reserved.

Compound	Administration Route	Dose Range	Animal Model	Observed Effect	Reference
NB001	Oral (p.o.)	3 - 25 mg/kg	Neuropathic & Inflammatory Pain	Dose-dependent analgesia	[3][6]
NB001	Intraperitoneal (i.p.)	1 - 30 mg/kg	Bone Cancer & Neuropathic Pain	Analgesia	[1][7]
ST034307	Intrathecal (i.t.)	0.1 - 1 nmol	Inflammatory Pain	Dose-dependent analgesia	[2]
ST034307	Subcutaneous (s.c.)	3 - 30 mg/kg	Visceral & Inflammatory Pain	Analgesia	[4][13]

Visualizations

Signaling Pathway of AC1 Inhibition

© 2026 BenchChem. All rights reserved.

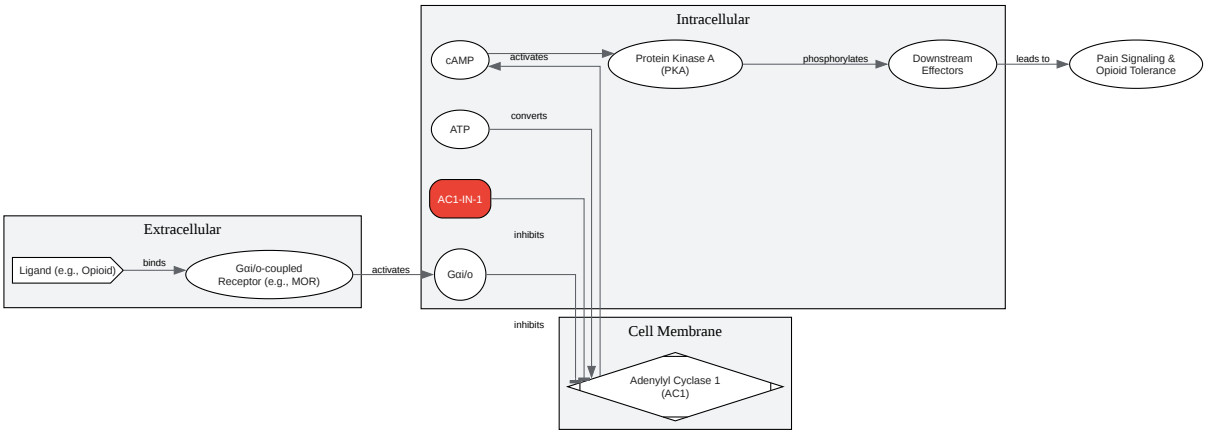

Click to download full resolution via product page

Caption: **AC1-IN-1** inhibits the conversion of ATP to cAMP.

Experimental Workflow for In Vivo Efficacy Testing

© 2026 BenchChem. All rights reserved.

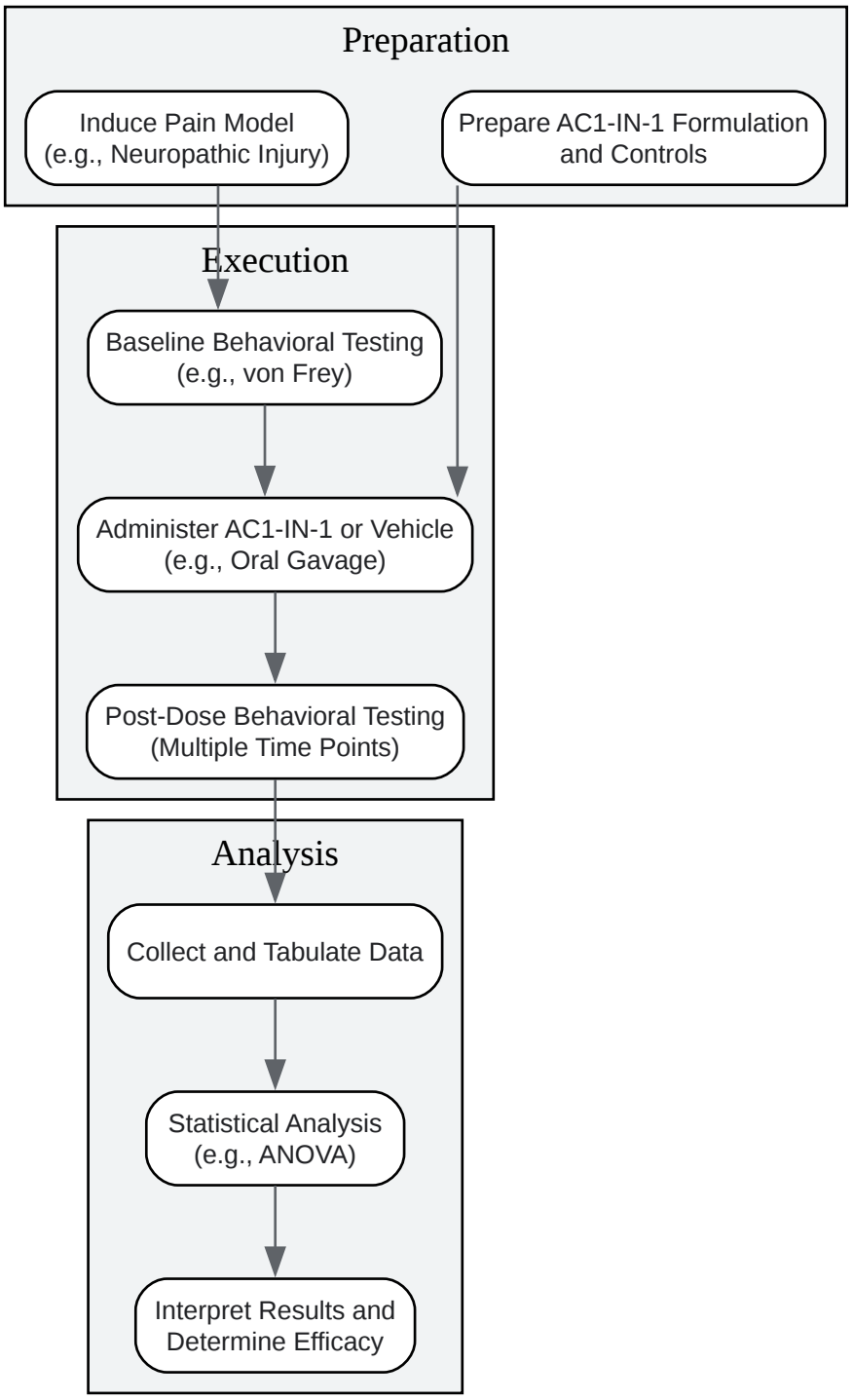

Click to download full resolution via product page

Caption: Workflow for assessing **AC1-IN-1** efficacy in vivo.

Troubleshooting Logic Diagram

© 2026 BenchChem. All rights reserved.

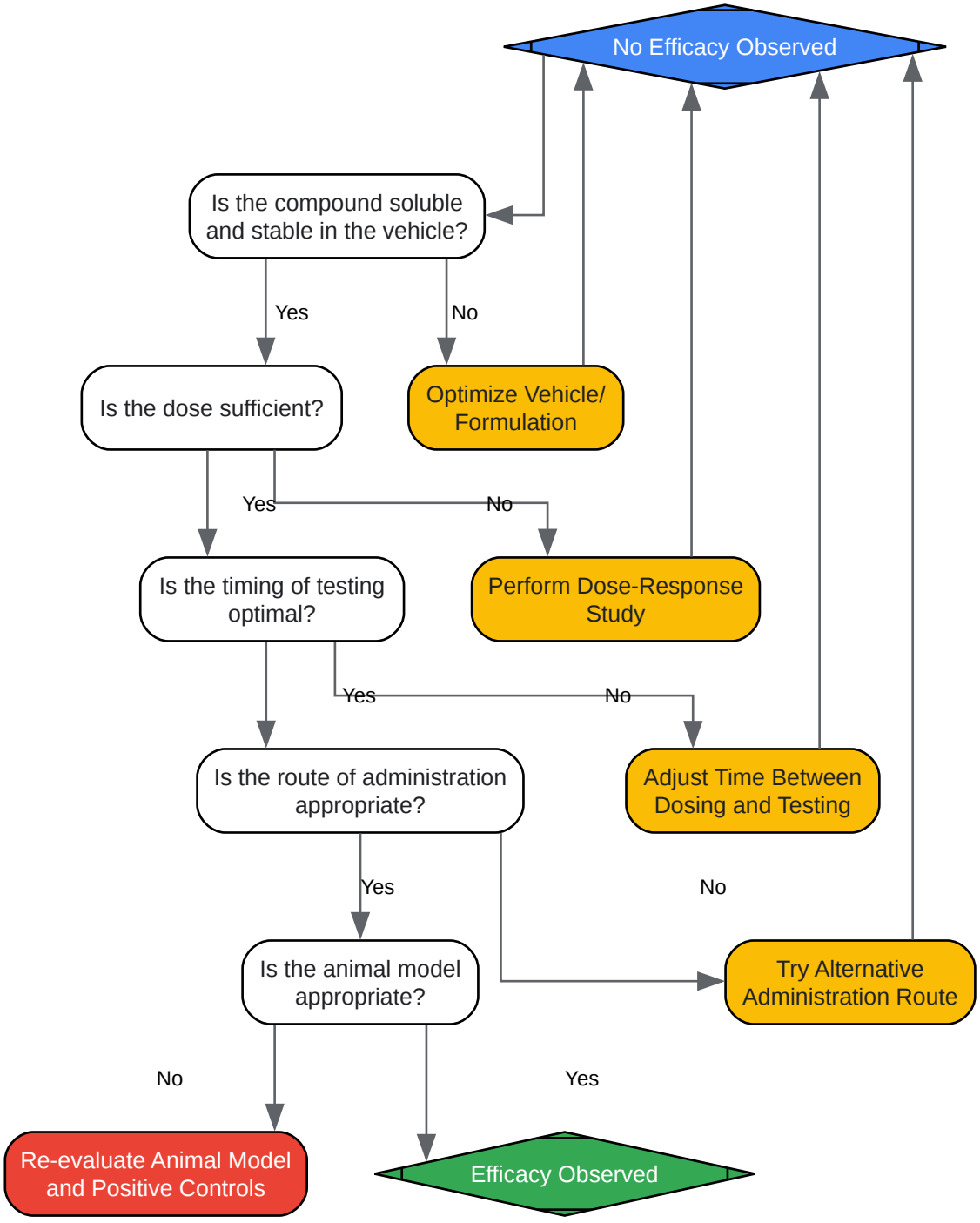

Click to download full resolution via product page

Caption: Decision tree for troubleshooting lack of efficacy.

© 2026 BenchChem. All rights reserved.

Need Custom Synthesis?

BenchChem offers custom synthesis for rare earth carbides and specific isotopiclabeling.

Email: info@benchchem.com or Request Quote Online.

References

- 1. archive.connect.h1.co [archive.connect.h1.co]
- 2. Identification of a selective small molecule inhibitor of type 1 adenylyl cyclase activity with analgesic properties - PMC [pmc.ncbi.nlm.nih.gov]
- 3. Inhibition of calcium-stimulated adenylyl cyclase subtype 1 (AC1) for the treatment of neuropathic and inflammatory pain in adult female mice - PMC [pmc.ncbi.nlm.nih.gov]
- 4. A Selective Adenylyl Cyclase 1 Inhibitor Relieves Pain Without Causing Tolerance - PMC [pmc.ncbi.nlm.nih.gov]
- 5. atlasofscience.org [atlasofscience.org]
- 6. researchgate.net [researchgate.net]
- 7. Analgesic effects of adenylyl cyclase inhibitor NB001 on bone cancer pain in a mouse model - PMC [pmc.ncbi.nlm.nih.gov]
- 8. jneurosci.org [jneurosci.org]
- 9. researchgate.net [researchgate.net]
- 10. A novel intravenous vehicle for preclinical cardiovascular screening of small molecule drug candidates in rat - PubMed [pubmed.ncbi.nlm.nih.gov]
- 11. Applicability of Vesicular Formulation in the Delivery of Hydrophobic Drugs | Asian Journal of Pharmaceutics (AJP) [asiapharmaceutics.info]
- 12. Formulation of hydrophobic therapeutics with self-assembling peptide and amino acid: A new platform for intravenous drug delivery - PubMed [pubmed.ncbi.nlm.nih.gov]
- 13. researchgate.net [researchgate.net]
- 14. researchgate.net [researchgate.net]
- 15. An overview of animal models of pain: disease models and outcome measures - PMC [pmc.ncbi.nlm.nih.gov]
- 16. Challenges of developing small-molecule kinase inhibitors for brain tumors and the need for emphasis on free drug levels - PMC [pmc.ncbi.nlm.nih.gov]

© 2026 BenchChem. All rights reserved.

- 17. pubs.acs.org [pubs.acs.org]
- To cite this document: BenchChem. [Technical Support Center: In Vivo Experiments with AC1-IN-1]. BenchChem, [2026]. [Online PDF]. Available at: [https://www.benchchem.com/product/b10831455/docs#technical-support-center-in-vivo-experiments-with-ac1-in-1]

Disclaimer & Data Validity:

The information provided in this document is for Research Use Only (RUO) and is strictly not intended for diagnostic or therapeutic procedures. While BenchChem strives to provide accurate protocols, we make no warranties, express or implied, regarding the fitness of this product for every specific experimental setup.

Technical Support: The protocols provided are for reference purposes. Unsure if this reagent suits your experiment?

Need Industrial/Bulk Grade? Request Custom Synthesis Quote

BenchChem

Our mission is to be the trusted global source of essential and advanced chemicals, empowering scientists and researchers to drive progress in science and industry.

Contact

Address: 3281 E Guasti Rd

Ontario, CA 91761, United States

Phone: (601) 213-4426

Email: info@benchchem.com

Contact our Ph.D. Support Team for a compatibility check