Reversible Inhibition with DI-591: A Comparative Analysis for Targeted Neddylation Research

Author: BenchChem Technical Support Team. **Date**: April 2026

Compound of Interest

Compound Name:	*DI-591*
Cat. No.:	*B10828051*

Get Quote

In the landscape of chemical biology and drug discovery, the ability to selectively modulate protein function is paramount. **DI-591**, a potent and cell-permeable small molecule, offers researchers a tool for the targeted inhibition of the DCN1-UBC12 interaction, a critical node in the neddylation pathway. A key feature of **DI-591** is its reversible mode of inhibition, which presents distinct advantages over irreversible inhibitors. This guide provides a comparative analysis of **DI-591** with other notable neddylation inhibitors, supported by experimental data, to assist researchers in selecting the appropriate tool for their studies.

Mechanism of Action: A Tale of Two Strategies

DI-591 operates through a highly specific, reversible interaction with DCN1 and DCN2, proteins that act as scaffolds for the neddylation of cullin 3. By binding to DCN1/2 with high affinity, **DI-591** effectively blocks the interaction with the E2 enzyme UBC12, thereby selectively preventing the neddylation of cullin 3[1][2]. This targeted approach contrasts sharply with that of broad-spectrum, irreversible inhibitors like MLN4924. MLN4924 acts upstream by inhibiting the NEDD8-activating enzyme (NAE), which is essential for the neddylation of all cullin family members[3][4][5]. Another point of comparison is DI-1548, a potent irreversible inhibitor that, like **DI-591**, targets DCN1 but forms a covalent bond, leading to permanent inactivation.

© 2026 BenchChem. All rights reserved.

The selective action of **DI-591** on cullin 3 neddylation is a significant advantage, as it allows for the specific investigation of CRL3-mediated biological processes without the confounding effects of pan-cullin inhibition. This specificity can lead to a more nuanced understanding of cellular pathways and potentially fewer off-target effects in therapeutic applications.

Comparative Performance Data

The following tables summarize the key performance metrics of **DI-591** in comparison to the irreversible inhibitors MLN4924 and DI-1548.

Inhibitor	Target	Mechanism of Action	Binding Affinity (Ki/Kd)
DI-591	DCN1/DCN2	Reversible inhibitor of DCN1-UBC12 interaction	10-12 nM (Ki for DCN1/DCN2)
MLN4924	NAE (NEDD8-Activating Enzyme)	Irreversible inhibitor of NAE	Not applicable (forms covalent adduct)
DI-1548	DCN1	Irreversible (covalent) inhibitor of DCN1	Not applicable (forms covalent bond)

Inhibitor	Cellular Potency (Inhibition of Cullin Neddylation)	Selectivity
DI-591	Effective at 0.3 µM for cullin 3 neddylation	Selective for cullin 3 neddylation
MLN4924	Effective at 10-300 nM for all cullins	Pan-cullin inhibitor
DI-1548	Effective at 1 nM for cullin 3 neddylation (~1000x more potent than DI-591)	Selective for cullin 3 neddylation

The Reversibility Advantage: A Closer Look

© 2026 BenchChem. All rights reserved.

The reversible nature of **DI-591**'s binding to DCN1 is a key differentiator. This property was experimentally confirmed using biolayer interferometry (BLI), which showed a clear dissociation phase for **DI-591**, in stark contrast to the irreversible binding of DI-1548.

Advantages of Reversible Inhibition:

- Controlled Duration of Action: The effect of a reversible inhibitor can be washed out, allowing for the study of temporal cellular processes and recovery of function.
- Reduced Potential for Off-Target Toxicity: Irreversible inhibitors can permanently modify off-target proteins, leading to unintended and potentially toxic effects. Reversible inhibitors are less likely to cause such cumulative, off-target modifications.
- Fine-tuning of Biological Response: The dynamic nature of reversible binding allows for a more controlled and titratable modulation of the target pathway.

Experimental Protocols

Detailed methodologies for key experiments cited in this guide are provided below to facilitate reproducibility and further investigation.

Neddylation Assay by Western Blot

This protocol is used to assess the level of neddylated and unneddylated cullins in cells following inhibitor treatment.

1. Cell Culture and Treatment:

- Plate cells (e.g., U2OS, KYSE70, or THLE2) and grow to 70-80% confluency.
- Treat cells with varying concentrations of **DI-591**, MLN4924, or DI-1548 for the desired time (e.g., 24 hours). Include a vehicle control (e.g., DMSO).

2. Cell Lysis:

- Wash cells with ice-cold PBS.
- Lyse cells in RIPA buffer supplemented with protease and phosphatase inhibitors.

© 2026 BenchChem. All rights reserved.

- Centrifuge the lysate to pellet cell debris and collect the supernatant.

3. Protein Quantification:

- Determine the protein concentration of the lysates using a BCA assay.

4. SDS-PAGE and Western Blotting:

- Normalize protein amounts and prepare samples with Laemmli buffer.
- Separate proteins on an SDS-PAGE gel.
- Transfer proteins to a PVDF membrane.
- Block the membrane with 5% non-fat milk or BSA in TBST.
- Incubate the membrane with primary antibodies against specific cullins (e.g., anti-Cullin 3) and a loading control (e.g., anti-GAPDH) overnight at 4°C.
- Wash the membrane and incubate with HRP-conjugated secondary antibodies.
- Detect the signal using an ECL substrate and an imaging system. Neddylated cullins will appear as a higher molecular weight band compared to the unneddylated form.

Biolayer Interferometry (BLI) for Reversibility Assessment

This protocol is used to determine the binding kinetics and reversibility of an inhibitor to its target protein.

1. Biosensor Preparation:

- Immobilize biotinylated DCN1 protein onto streptavidin (SA) biosensors.

2. Baseline:

- Establish a stable baseline by dipping the biosensors into the assay buffer.

© 2026 BenchChem. All rights reserved.

3. Association:

- Dip the biosensors into wells containing different concentrations of the inhibitor (e.g., **DI-591** or DI-1548) to monitor the binding (association phase).

4. Dissociation:

- Transfer the biosensors back to wells containing only the assay buffer to monitor the release of the inhibitor from the target protein (dissociation phase).

5. Data Analysis:

- The binding and dissociation rates are recorded in real-time. A clear decay in the signal during the dissociation phase indicates reversible binding, while a stable signal suggests irreversible binding.

Visualizing the Pathways and Concepts

To further clarify the mechanisms and advantages discussed, the following diagrams have been generated.

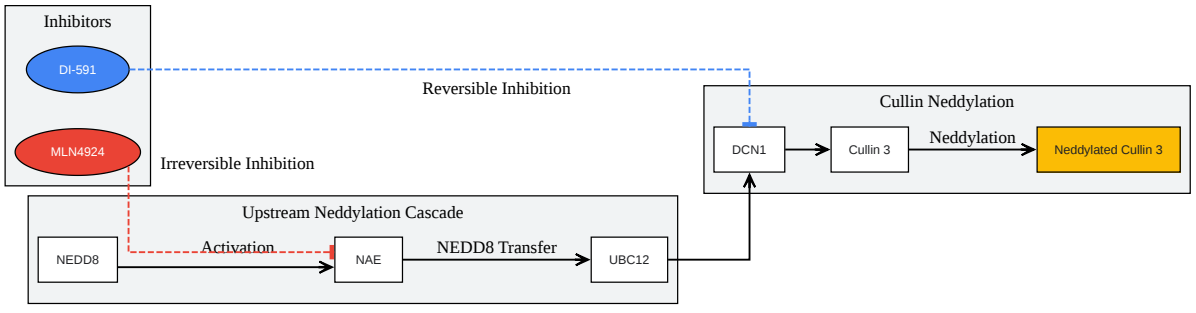

Click to download full resolution via product page

© 2026 BenchChem. All rights reserved.

Caption: Signaling pathway of cullin 3 neddylation and points of inhibition.

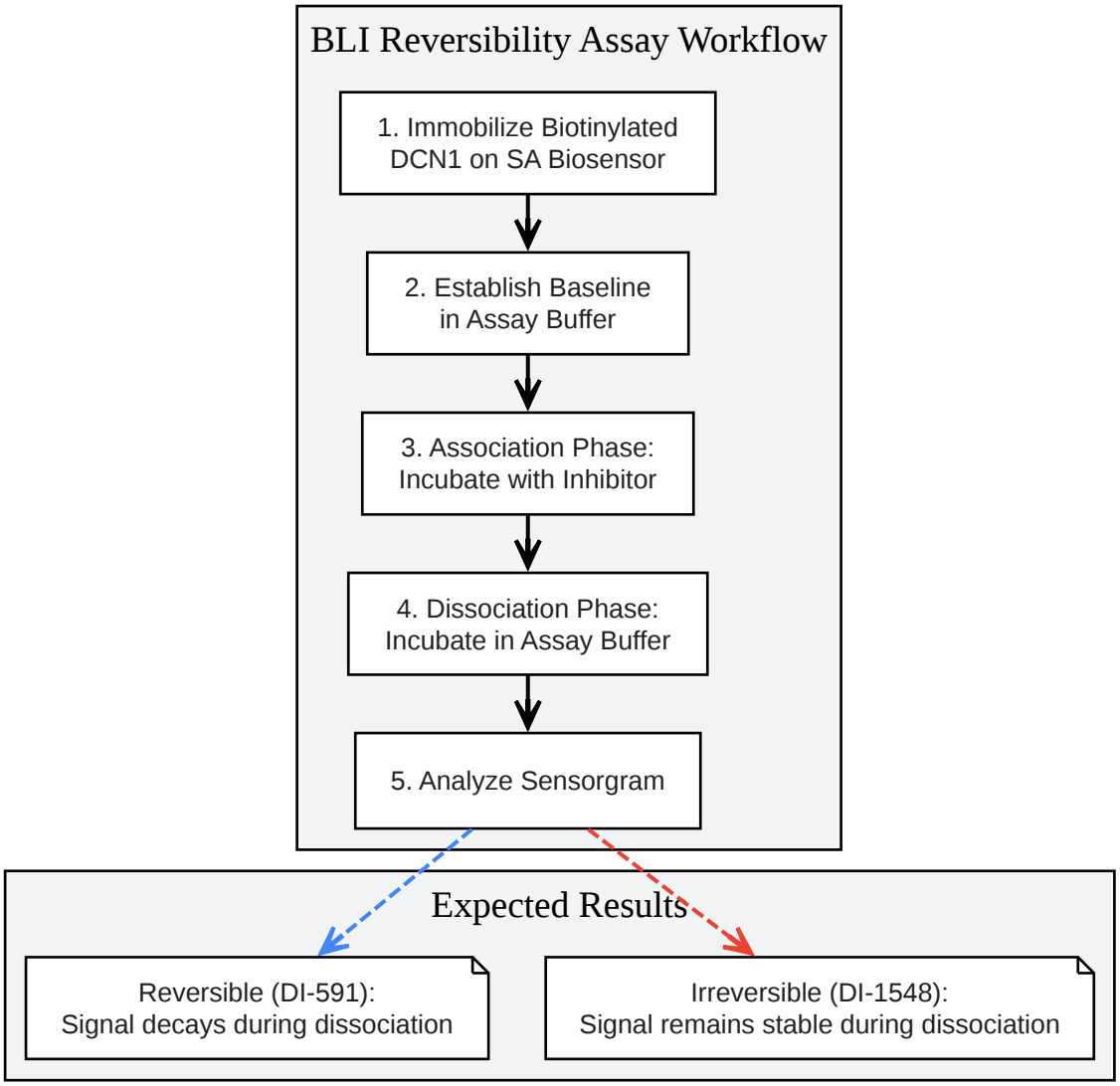

Click to download full resolution via product page

Caption: Experimental workflow for assessing inhibitor reversibility using BLI.

© 2026 BenchChem. All rights reserved.

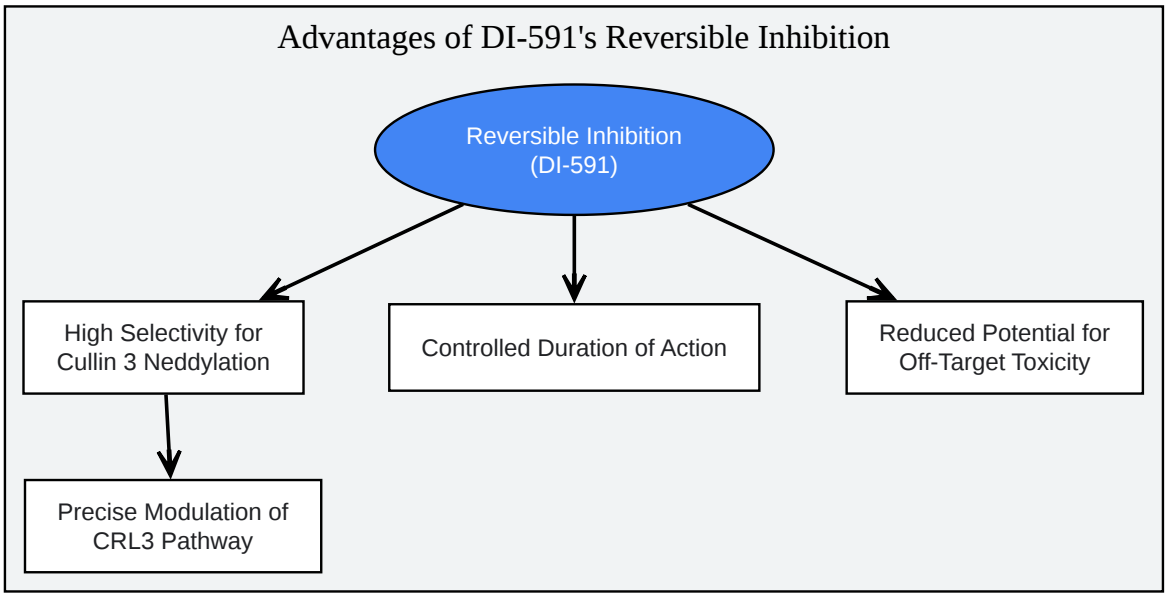

Click to download full resolution via product page

Caption: Logical relationship of the advantages of **DI-591**'s reversible inhibition.

In conclusion, **DI-591**'s reversible and selective inhibition of the DCN1-UBC12 interaction provides a valuable tool for researchers studying the specific roles of cullin 3 neddylation. Its distinct mechanism of action and favorable characteristics, particularly when compared to irreversible and pan-cullin inhibitors, make it an excellent choice for targeted and controlled investigations of the neddylation pathway.

Need Custom Synthesis?

BenchChem offers custom synthesis for rare earth carbides and specific isotopiclabeling.

Email: info@benchchem.com or Request Quote Online.

References

- 1. A potent small-molecule inhibitor of the DCN1-UBC12 interaction that selectively blocks cullin 3 neddylation - PMC [pmc.ncbi.nlm.nih.gov]

© 2026 BenchChem. All rights reserved.

- 2. A potent small-molecule inhibitor of the DCN1-UBC12 interaction that selectively blocks cullin 3 neddylation - PubMed [pubmed.ncbi.nlm.nih.gov]
- 3. Advances in Cancer Treatment by Targeting the Neddylation Pathway - PMC [pmc.ncbi.nlm.nih.gov]
- 4. mdpi.com [mdpi.com]
- 5. MLN4924 suppresses neddylation and induces cell cycle arrest, senescence, and apoptosis in human osteosarcoma - PMC [pmc.ncbi.nlm.nih.gov]
- To cite this document: BenchChem. [Reversible Inhibition with DI-591: A Comparative Analysis for Targeted Neddylation Research]. BenchChem, [2026]. [Online PDF]. Available at: [https://www.benchchem.com/product/b10828051/docs#reversible-inhibition-with-di-591-a-comparative-analysis-for-targeted-neddylation-research]

Disclaimer & Data Validity:

The information provided in this document is for Research Use Only (RUO) and is strictly not intended for diagnostic or therapeutic procedures. While BenchChem strives to provide accurate protocols, we make no warranties, express or implied, regarding the fitness of this product for every specific experimental setup.

Technical Support: The protocols provided are for reference purposes. Unsure if this reagent suits your experiment?

Need Industrial/Bulk Grade? Request Custom Synthesis Quote

BenchChem

Our mission is to be the trusted global source of essential and advanced chemicals, empowering scientists and researchers to drive progress in science and industry.

Contact

Address: 3281 E Guasti Rd

Ontario, CA 91761, United States

Phone: (601) 213-4426

Email: info@benchchem.com

© 2026 BenchChem. All rights reserved.

Contact our Ph.D. Support Team for a compatibility check

© 2026 BenchChem. All rights reserved.